THK

ELECTRIC ACTUATORS

NEW

Press series

PCT/PC

Servo Driver Controller

TLC/THC

For details, visit THK at **www.thk.com**

* Product information is updated regularly on the THK website.

THK CO., LTD.
TOKYO, JAPAN

CATALOG No.378-11E

Electrical Actuator
Press Series

PCT

PCT are cylinder type electrical actuators that operate with the use of a ball screw.

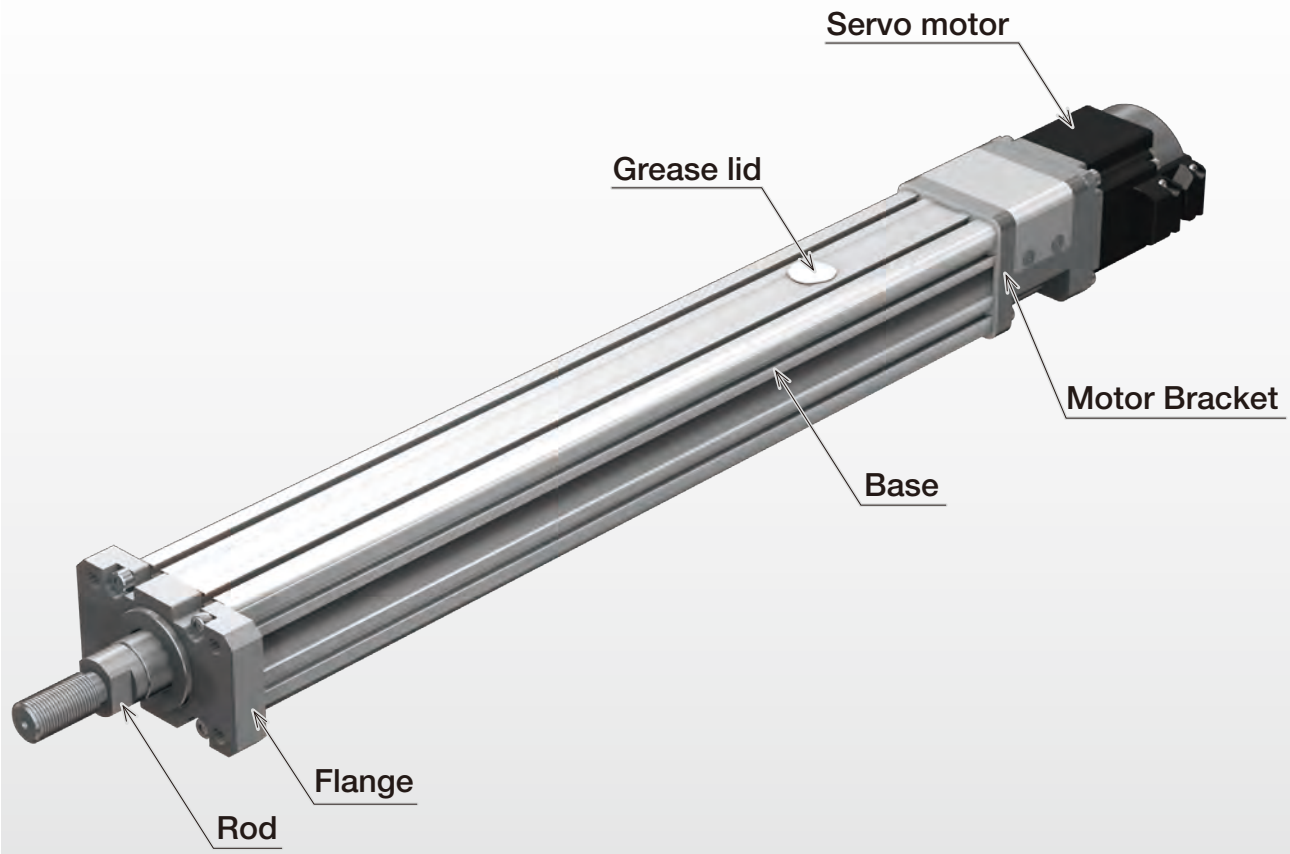

Features

Press actuator

This actuator is offers superior axial load rigidity and thus available for use in a small press fitting and caulking machine.

Motorized

A motorized mechanism is employed instead of an air cylinder, reducing process time, increasing accuracy, and providing multi-point positioning, for improved productivity.

Many possible variations

A combination of ball screw lead and motor capacity allows you to select products suited to your needs from five types of variations with rated thrusts ranging from about 100 to 800N.

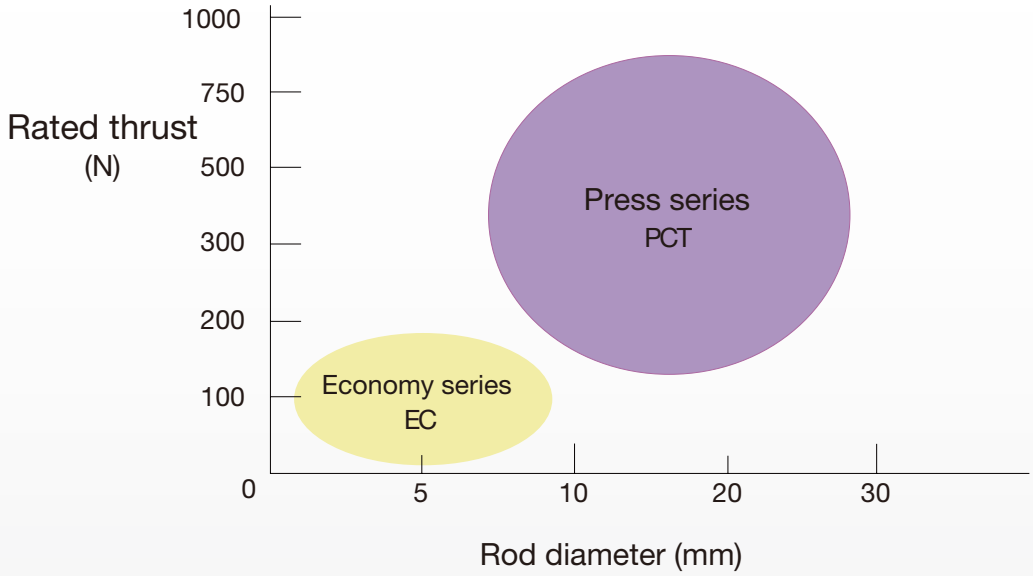

Flexible device design

PCT can support any installation direction through the use of a flange or T slot on the main unit.
Motor installation is also possible by direct coupling or wrap.
(When a radial load and moment load are applied to the rod, a guide must be installed separately.)

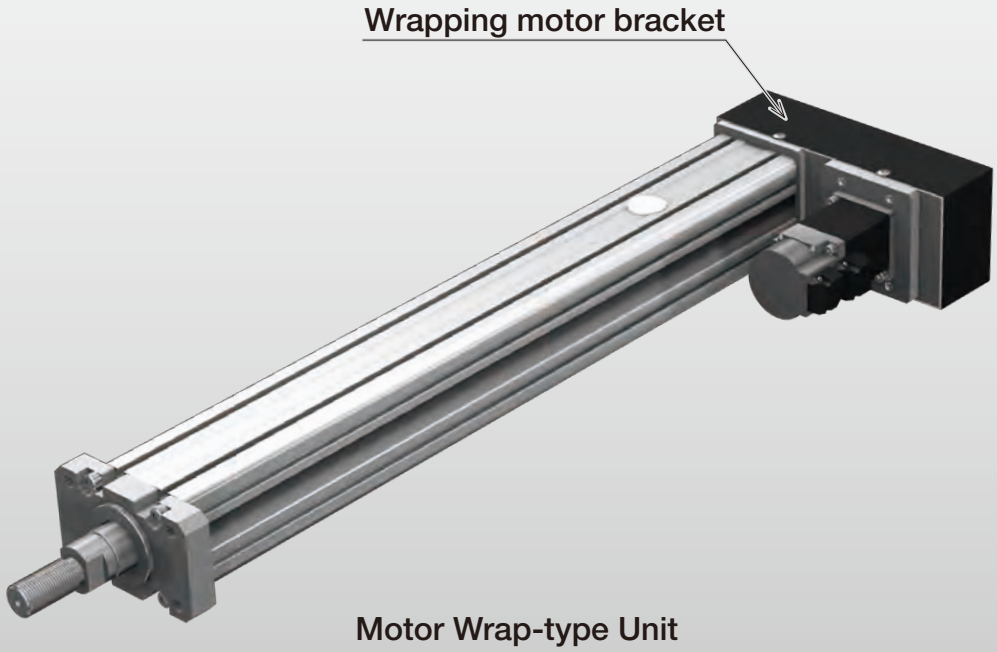

Motor Wrap-type Unit

Electrical Actuator
Press Series

PC

Compact, High-precision, High-rigidity Servo Press Actuator

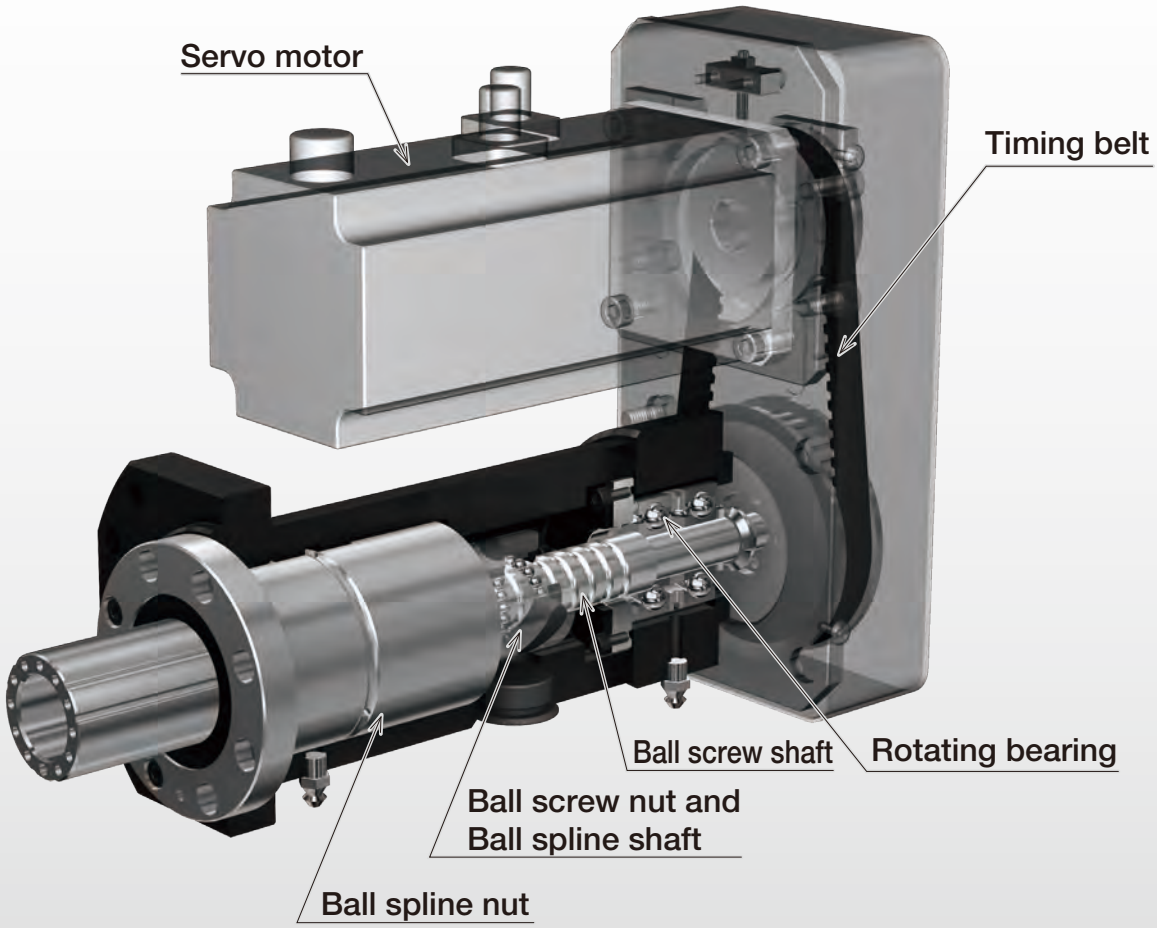

A servo press actuator with a new structure incorporating a precision ball screw nut and ball spline shaft, providing a compact unit that delivers high thrust.

Features

Compact structure

The new integrated structure, incorporating a precision ball screw nut and ball spline shaft, significantly reduces the product length, making the unit much more compact.

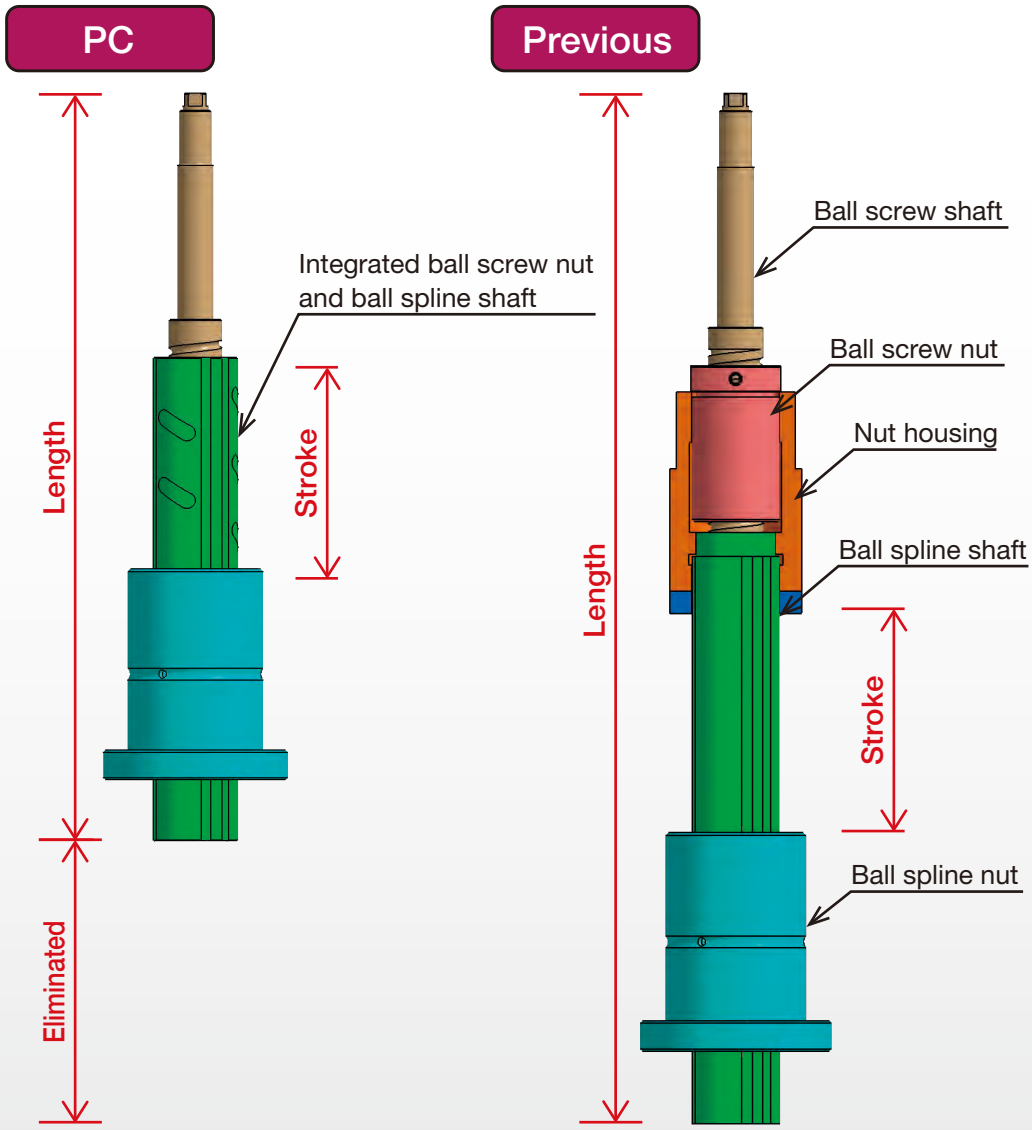

30% less length (when stroke is 50mm)

(Compared to our previous product)

Designed to withstand compressive loads

The bearing arrangement provides high resistance against compressive loads.

High load capacity

The ball screw shaft diameter and loaded circuitry have been maximized to enable high load capacity.

High rigidity

The Ball Spline Model LF enables smooth movement without clearance, providing a guide with high rigidity.

High feed precision

The feed mechanism employs a precision ball screw, providing superior feed precision.

Controllers

TLC

Operation method	Position
Step data count *1	512
Input power supply	24VDC
Network *2	–

*1 Varies depending on function mode.
*2 For information on network support, visit the THK Technical Support website: https://tech.thk.com/.

THC

Operation method		Position
Step data count *1		512
Input power supply *2	Main circuit	100VAC single-phase 200VAC single-phase
	Control circuit	100VAC single-phase 200VAC single-phase
Network *3		–

*1 Varies depending on function mode.
*2 When 750W is selected for the motor rated output, specification for power supply voltage is limited to 200V type.
*3 For information on network support, visit the THK Technical Support website: https://tech.thk.com/.

Series Models

Model	PCT20(R)	PCT25(R)		PC30	PC40
Combined control device	TLC	THC			
Motor rated output	50W	100W	200W	400W	750W
Operation method	Position (pressing operation)				
Control axis count	1				
Input power supply	24VDC	100VAC or 200VAC			200VAC
Encoder method	Absolute (incremental)				
Control axis count	1				
Step data count *1	512				

*1 Varies depending on function mode.

- Selectable function modes
- Up to 50 alarms in alarm history (including power ON)
- Absolute supported

Function Modes

Six modes are provided to support various requirements and purposes.

Function mode		Overview	Step data count	Pressing operation
Multi-point positioning	0: 64-position	Multi-point positioning operation with 64 points With area output, with P area output	64	○
	1: External unit input instruction	Multi-point positioning operation with 64 points I/O-based external unit instruction mode Without area output, with P area output	64	–
	2: 256-position	Multi-point positioning operation with 256 points Without area output, with P area output	256	○
	3: 512-position	Multi-point positioning operation with 512 points Without area output, without P area output	512	○
Electromagnetic valve	4: Solenoid mode 1	Multi-point positioning operation with 7 points Direct move command input With area output, with P area output	7	○
	5: Solenoid mode 2	Multi-point positioning operation with 3 points Direct move command input With position sensor auto-switch output, area output, and P area output	3	–

For information on network support, visit the THK Technical Support website: https://tech.thk.com/.

Specifications

Cylinder-type Products

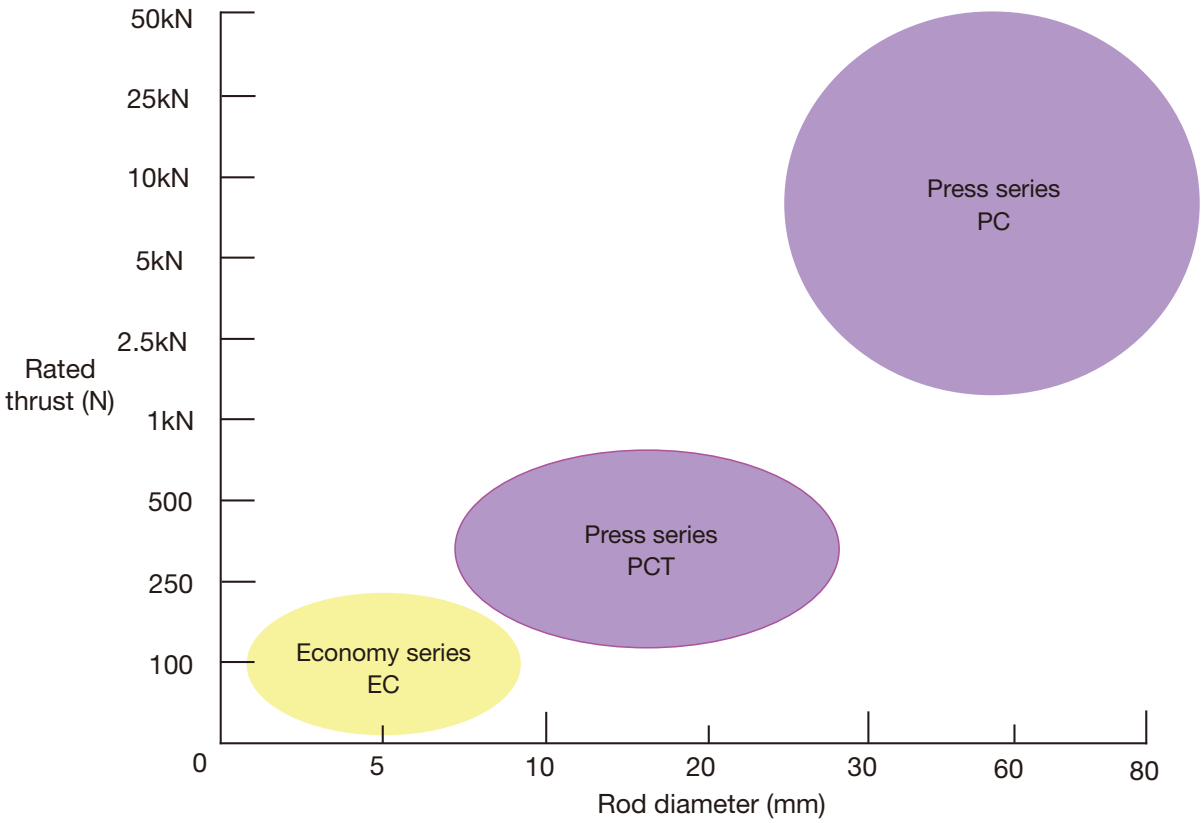

PCT

Model	Motor rated output [W]	Rated thrust [N]	Maximum speed [mm/s]	Maximum stroke [mm]	Generated thrust [N] 0 100 250 500 1000 1500 2500 5000
PCT20-06N	50	133	300	200	130 402
PCT20R-06N					
PCT25-06N	100	266		300	260 796
PCT25R-06N					
PCT25-04N		400	200		400 1194
PCT25R-04N					
PCT25-06N	200	536	300		500 1600
PCT25R-06N					
PCT25-04N		804	200		800 2400
PCT25R-04N					

Rated thrust
Instantaneous maximum thrust

Note) contact THK before attempting a pressing operation with generated thrust above the rated thrust and below the instantaneous maximum thrust.

PC

Model	Instantaneous maximum thrust [kN]	Servo motor		Rated thrust [kN]	Maximum speed [mm/s]	Maximum stroke [mm]	Generated thrust [kN]													
		Manufacturer	Rated output [kW]				0	1	2	3	7.5	10	15	20	30	40	50	70	100	120
PC30-06A	3.3	Mitsubishi Electric Corporation	0.4	1.6	210	250		1.6	3.3											
		Yaskawa Electric Corporation																		
		Sanyo Denki Co., Ltd.																		
PC40-06B	6.4	Mitsubishi Electric Corporation	0.75	3.2	200				3.2		6.4									
		Yaskawa Electric Corporation																		
		Sanyo Denki Co., Ltd.																		
PC40H-08C	11.2	Mitsubishi Electric Corporation	1.0	5.6	151				5.6											
		Yaskawa Electric Corporation	0.85	6.3	113				6.3			11.2								
		Sanyo Denki Co., Ltd.	1.2	6.7	151				6.7											
PC50-06D	16.8	Mitsubishi Electric Corporation	1.5	8.4	150				8.4											
		Yaskawa Electric Corporation	1.3	9.8	112				9.8				16.8							
		Sanyo Denki Co., Ltd.	1.8	10.2	150				10.2											
PC60-10E	21.8	Mitsubishi Electric Corporation	2.0	10.9	155					10.9										
		Yaskawa Electric Corporation	1.8	13.1	116					13.1				21.8						
		Sanyo Denki Co., Ltd.	2.0	10.9	155					10.9										
PC60H-10F	35.6	Mitsubishi Electric Corporation	3.5	17.8	166					17.8										
		Yaskawa Electric Corporation	2.9	19.8	125					19.8					35.6					
		Sanyo Denki Co., Ltd.	3.5	18.1	166					18.1										
PC80L-12G	71	Mitsubishi Electric Corporation	5	24	177						24									
	71	Yaskawa Electric Corporation	4.4	28	133						28					71				
	75	Sanyo Denki Co., Ltd.	4.5	21	177						21						75			
PC80-12G	100	Mitsubishi Electric Corporation	7	33	177							33					100			
	102	Yaskawa Electric Corporation	5.5	35	133							35					102			
	107	Sanyo Denki Co., Ltd.	5.5	35	133							35					107			
PC80H-12G	120	Mitsubishi Electric Corporation	4.2	40	88							40								
		Yaskawa Electric Corporation	7.5	48	133							48						120		
		Sanyo Denki Co., Ltd.	7.5	48	133							48								

Rated thrust

Instantaneous maximum thrust

Note) contact THK before attempting a pressing operation with generated thrust above the rated thrust and below the instantaneous maximum thrust.

MEMO

Model Configuration with Servo Driver Controller TLC/THC

Model		Lead, reduction ratio		Stroke	Design symbol		Options		Control device		Motor cable orientation	
PC30	-	06A	-	0200	A	-	R	-	TH	-	R	/
(1)		(2)		(3)	(4)		(5)		(6)		(7)	
PCT20		04N		0050 : 50mm	No symbol : PCT only		N : Direct coupling		TL: TLC		U: Up	
PCT25		06N		0100 : 100mm	A : PC only		D: Down		TH: THC		D: Down	
PCT20R		06A		0150 : 150mm			L : Left				L : Left	
PCT25R		06B		0200 : 200mm			R: Right				R: Right	
PC30				0250 : 250mm								
PC40				0300 : 300mm								

R for PCT represents motor wrap.

These symbols represent lead and reduction ratio. For PCT, motor wrap configuration is limited to reduction ratio 1/1. Select from the table below.

Select options from the table below. PCT: Select either direct motor coupling or motor wrap. PC: Select greasing position.

Select cable orientation from the table on page 10.

Combinations

Model (1)	Lead, reduction ratio (2)	Stroke (3)	Design symbol (4)	Control device (6)	Motor rated output (8)		Home position method (9)	Power supply voltage (10)
PCT20 PCT20R	06N	0050 to 0200	No symbol	TL: TLC	M05 M05B	50W	D00: Motor side or R00: Reverse motor side	DC: 24VDC
PCT25 PCT25R	06N or 04N	0050 to 0300	No symbol	TH: THC	M10 M10B	100W		D1: 100V or D2: 200V
					M20 M20B	200W		
PC30	06A	0050 to 0250	A	TH: THC	M40 M40B	400W	D00: Motor side	D1: 100V or D2: 200V
PC40	06B				M75 M75B	750W		D2: 200V

Options: Motor wrap direction or greasing position

PCT: Select wrap direction

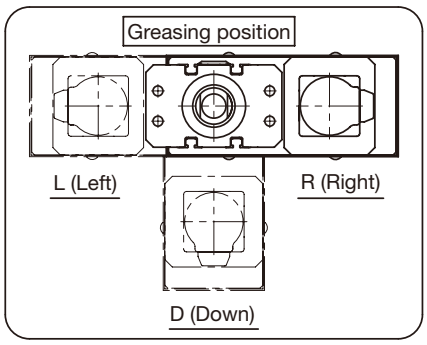

(Seen from side A)

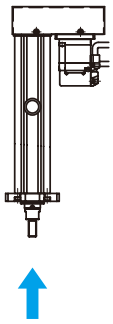

PC: Select greasing position

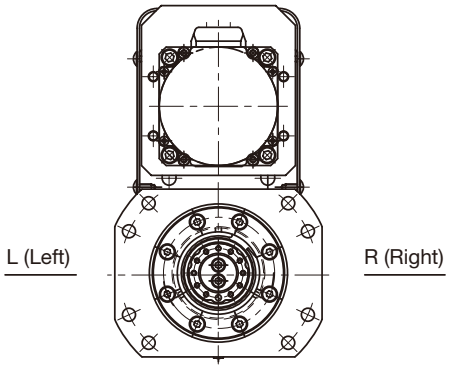

Motor rated output	Home position method	Power supply voltage	Cable type and length
M40	D00	D2	F3
(8)	(9)	(10)	(11)
M05 : 50W	D00: Motor side	DC: 24VDC	F3 : Standard 3m
M10 : 100W	R00: Reverse motor side	D1 : 100V	F5 : Standard 5m
M20 : 200W		D2 : 200V	FA : Standard 10m
M40 : 400W			H3 : High flex 3m
M75 : 750W			H5 : High flex 5m
M05B : 50W with brake			HA: High flex 10m
M10B : 100W with brake			
M20B : 200W with brake			
M40B : 400W with brake			
M75B : 750W with brake			

Select a type and length of motor, encoder, and brake cable.

Select motor rated output, home position method, and power supply voltage from the Combinations table.

Motor cable orientation when directly coupled (PCT)

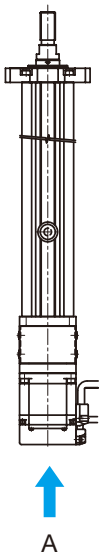

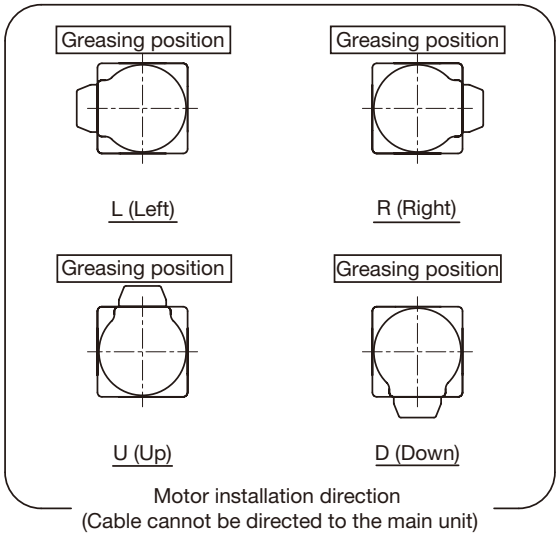

(Seen from side A)

Motor cable orientation when wrapped (PCT)

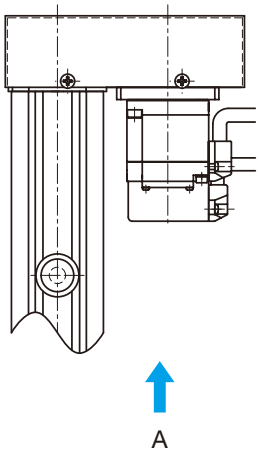

Motor cable orientation (PC)

Motor cable orientation	Up	Left	Right
Symbol	U	L	R
Motor cable orientation (Seen from side A)	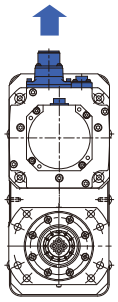	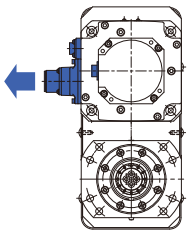	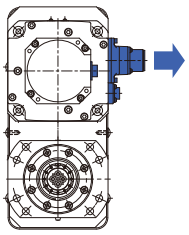

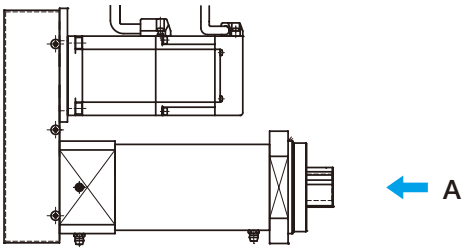

PCT20

Press series
Rod diameter: 20mm, Direct motor coupling, 50W type

Specifications

Motor rated output [W]				50
Ball screw lead [mm]				6
Rated thrust *1 [N]				133
Instantaneous maximum thrust *2 [N]				402
Brake retention [N]				133
Rated speed *3 [mm/s]				300
Positioning repeatability [mm]				±0.010
Lost motion [mm]				0.1
Rod non-rotational accuracy [°]				±1
Maximum load capacity *4 [kg]	Acceleration and deceleration rate	Horizontal mount	0.3G	20
		Vertical mount	0.3G	5
Running life *5 [km]				5,000

*1 At rated motor torque.
*2 Dependent on permissible axial load.
*3 At rated motor speed.
*4 At rated speed.
*5 Conditions: Under maximum load capacity (with LM guide), at rated speed, 0.3G acceleration and deceleration rate.

Dimensions

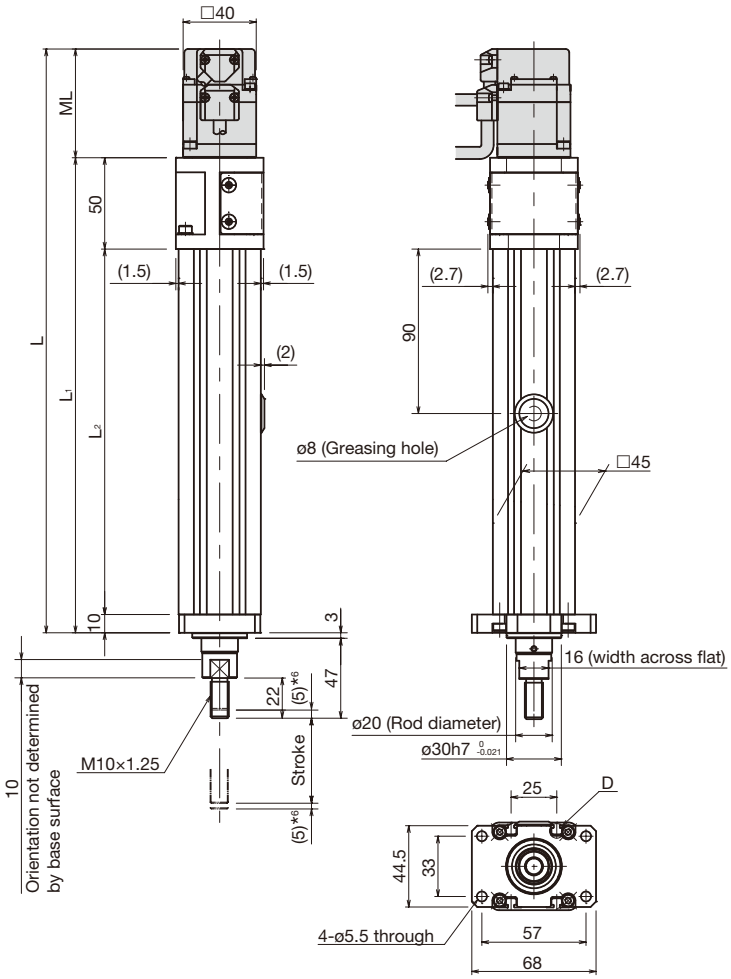

Direct motor coupling type with motor cable orientation right (R).

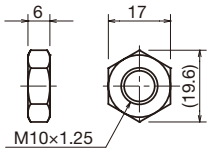

Hexagonal Nut (×1)

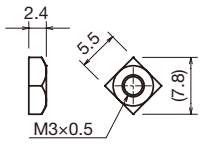

Square Nut (×8)

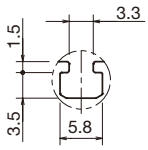

Section D (detail)

*6 Stroke up to mechanical stopper.

Stroke [mm] (Stroke between mechanical stoppers)		50 (60)	100 (110)	150 (160)	200 (210)
Maximum speed *7 [mm/s]	Ball screw lead: 6mm	300			230
Dimensions *8 [mm]	L	319.5 (355.1)	369.5 (405.1)	419.5 (455.1)	469.5 (505.1)
	L_1	260	310	360	410
	L_2	200	250	300	350
	ML	59.5 (95.1)			
Weight *8 [kg]	With motor	1.9 (2.1)	2.1 (2.3)	2.3 (2.5)	2.5 (2.7)

*7 Dependent on motor speed (at 3,000min^{-1}) and permissible rotational speed of the ball screw.
*8 Values when brake is installed are shown in parentheses.

PCT20R

Press series
Rod diameter: 20mm, Motor wrap, 50W type

Specifications

Motor rated output [W]				50
Ball screw lead [mm]				6
Rated thrust *1 [N]				133
Instantaneous maximum thrust *2 [N]				402
Brake retention [N]				133
Rated speed *3 [mm/s]				300
Positioning repeatability [mm]				±0.010
Lost motion [mm]				0.1
Rod non-rotational accuracy [°]				±1
Maximum load capacity *4 [kg]	Acceleration and deceleration rate	Horizontal mount	0.3G	20
		Vertical mount	0.3G	5
Running life *5 [km]				5,000

*1 At rated motor torque.
*2 Dependent on permissible axial load.
*3 At rated motor speed.
*4 At rated speed.
*5 Conditions: Under maximum load capacity (with LM guide), at rated speed, 0.3G acceleration and deceleration rate.

Dimensions

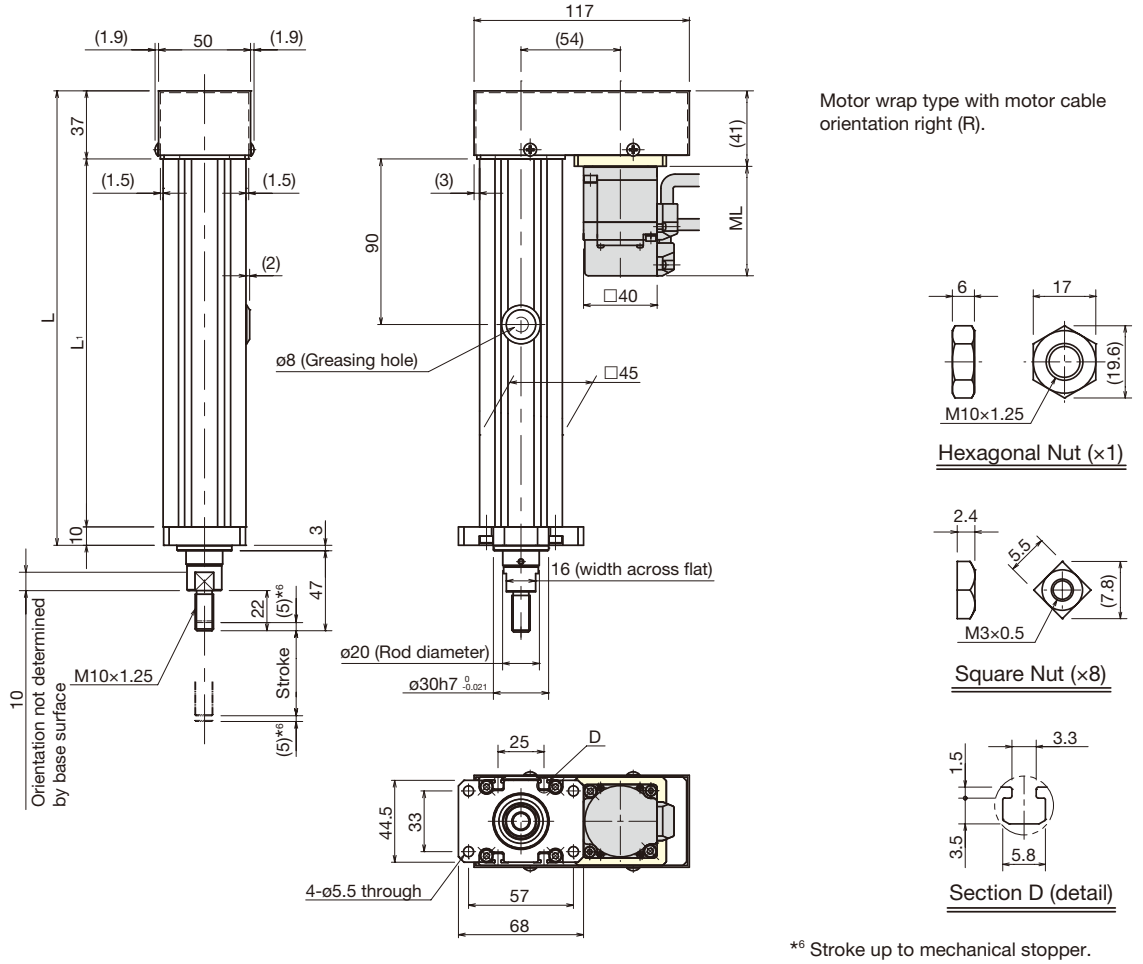

Motor wrap type with motor cable orientation right (R).

*6 Stroke up to mechanical stopper.

Stroke [mm] (Stroke between mechanical stoppers)		50 (60)	100 (110)	150 (160)	200 (210)
Maximum speed *7 [mm/s]	Ball screw lead: 6mm	300			230
Dimensions *8 [mm]	L	247	297	347	397
	L_1	200	250	300	350
	ML	59.5 (95.1)			
Weight *8 [kg]	With motor	2.0 (2.2)	2.2 (2.4)	2.4 (2.6)	2.6 (2.8)

*7 Dependent on motor speed (at 3,000min^{-1}) and permissible rotational speed of the ball screw.
*8 Values when brake is installed are shown in parentheses.

PCT25

Press series
Rod diameter: 25mm, Direct motor coupling, 100W type

Specifications

Motor rated output [W]				100	
Ball screw lead [mm]				6	4
Rated thrust *1 [N]				266	400
Instantaneous maximum thrust *2 [N]				796	1,194
Brake retention [N]				266	400
Rated speed *3 [mm/s]				300	200
Positioning repeatability [mm]				±0.010	
Lost motion [mm]				0.1	
Rod non-rotational accuracy [°]				±1	
Maximum load capacity *4 [kg]	Acceleration and deceleration rate	Horizontal mount	0.3G	35	40
		Vertical mount	0.3G	10	10
Running life *5 [km]				5,000	

*1 At rated motor torque.
*2 Dependent on permissible axial load.
*3 At rated motor speed.
*4 At rated speed.
*5 Conditions: Under maximum load capacity (with LM guide), at rated speed, 0.3G acceleration and deceleration rate.

Dimensions

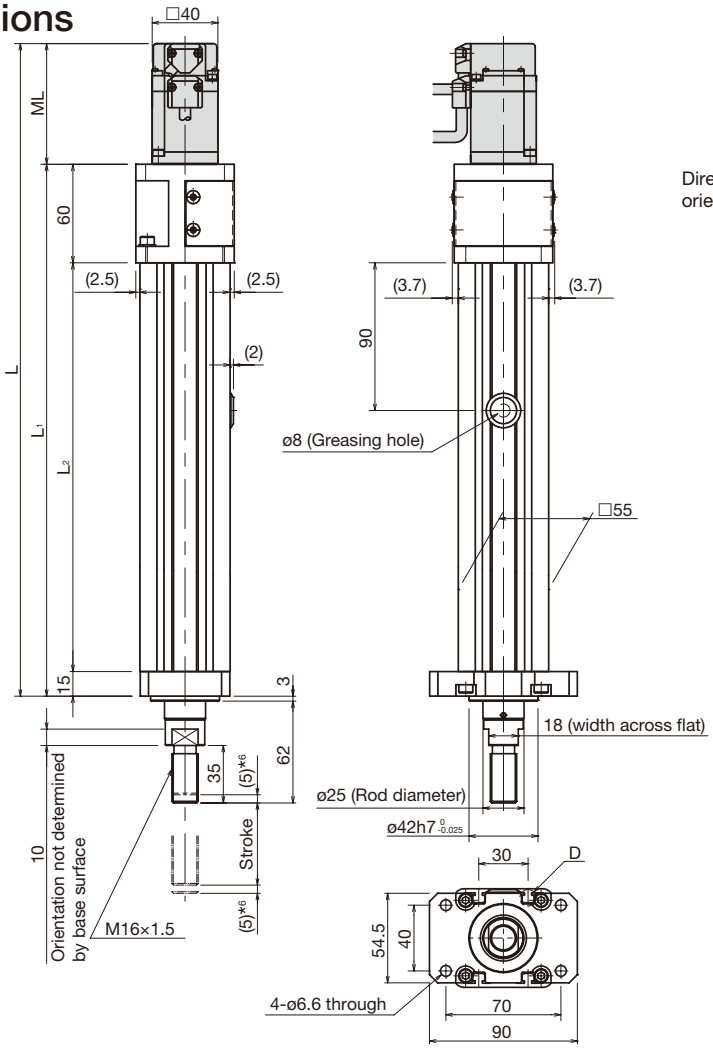

Direct motor coupling type with motor cable orientation right (R).

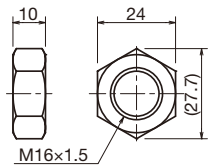

Hexagonal Nut (×1)

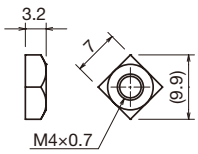

Square Nut (×8)

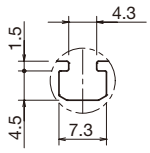

Section D (detail)

*6 Stroke up to mechanical stopper.

Stroke [mm] (Stroke between mechanical stoppers)		50 (60)	100 (110)	150 (160)	200 (210)	250 (260)	300 (310)
Maximum speed *7 [mm/s]	Ball screw lead: 6mm	300			260	200	160
	Ball screw lead: 4mm	200				160	130
Dimensions *8 [mm]	L	397.5 (433.1)	447.5 (483.1)	497.5 (533.1)	547.5 (583.1)	597.5 (633.1)	647.5 (683.1)
	L_1	324	374	424	474	524	574
	L_2	249	299	349	399	449	499
	ML	73.5 (109.1)					
Weight *8 [kg]	With motor	3.4 (3.6)	3.7 (3.9)	4.0 (4.2)	4.4 (4.6)	4.7 (4.9)	5.0 (5.2)

*7 Dependent on motor speed (at 3,000min^{-1}) and permissible rotational speed of the ball screw.
*8 Values when brake is installed are shown in parentheses.

PCT25R

Press series
Rod diameter: 25mm, Motor wrap, 100W type

Specifications

Motor rated output [W]				100	
Ball screw lead [mm]				6	4
Rated thrust *1 [N]				266	400
Instantaneous maximum thrust *2 [N]				796	1,194
Brake retention [N]				266	400
Rated speed *3 [mm/s]				300	200
Positioning repeatability [mm]				±0.010	
Lost motion [mm]				0.1	
Rod non-rotational accuracy [°]				±1	
Maximum load capacity *4 [kg]	Acceleration and deceleration rate	Horizontal mount	0.3G	35	40
		Vertical mount	0.3G	10	10
Running life *5 [km]				5,000	

*1 At rated motor torque.
*2 Dependent on permissible axial load.
*3 At rated motor speed.
*4 At rated speed.
*5 Conditions: Under maximum load capacity (with LM guide), at rated speed, 0.3G acceleration and deceleration rate.

Dimensions

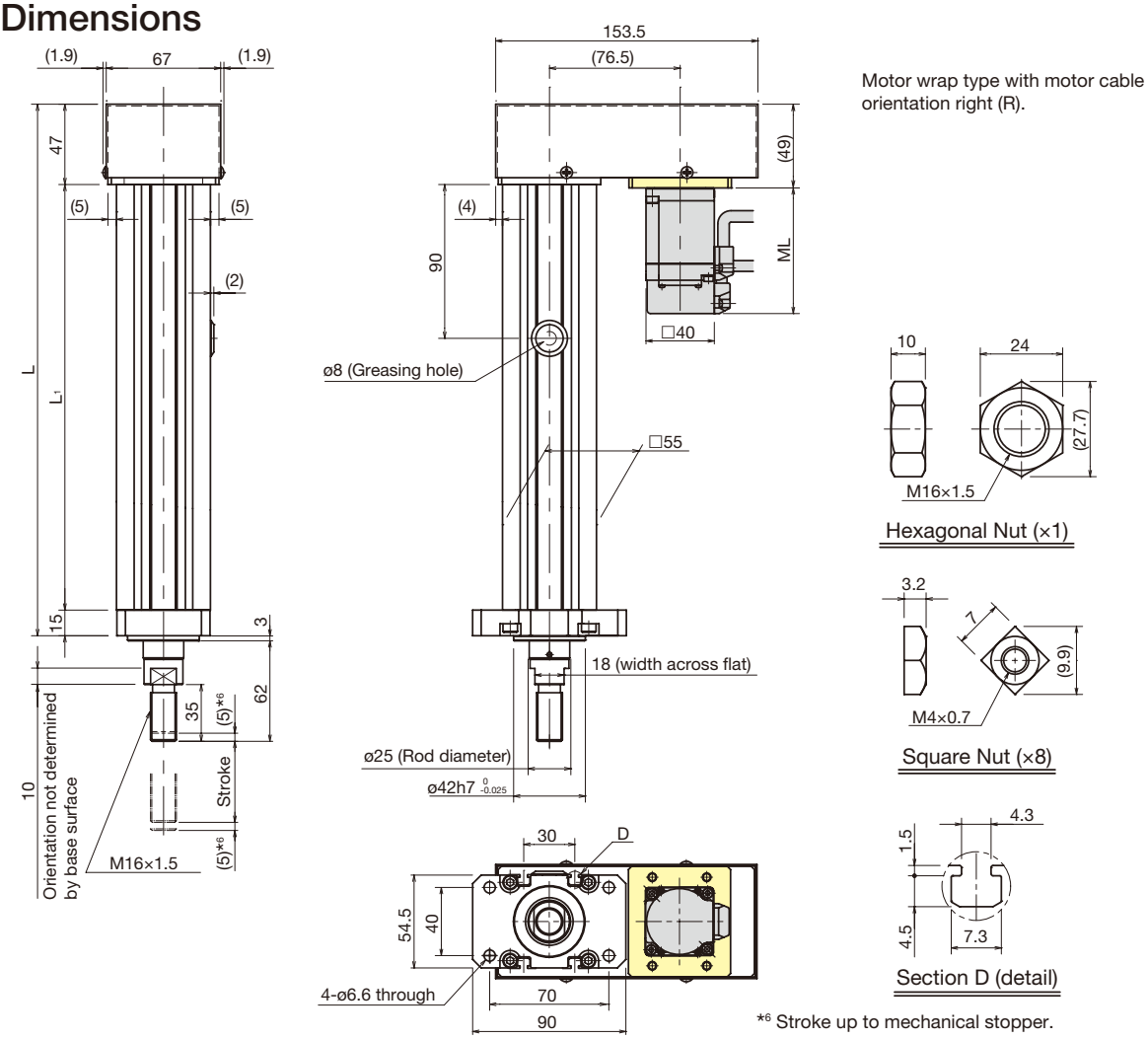

*6 Stroke up to mechanical stopper.

Stroke [mm] (Stroke between mechanical stoppers)		50 (60)	100 (110)	150 (160)	200 (210)	250 (260)	300 (310)
Maximum speed *7 [mm/s]	Ball screw lead: 6mm	300			260	200	160
	Ball screw lead: 4mm	200				160	130
Dimensions *8 [mm]	L	311	361	411	461	511	561
	L_1	249	299	349	399	449	499
	ML	73.5 (109.1)					
Weight *8 [kg]	With motor	3.6 (3.8)	3.9 (4.1)	4.3 (4.5)	4.6 (4.8)	4.9 (5.1)	5.2 (5.4)

*7 Dependent on motor speed (at 3,000min^{-1}) and permissible rotational speed of the ball screw.
*8 Values when brake is installed are shown in parentheses.

PCT25

Press series
Rod diameter: 25mm, Direct motor coupling, 200W type

Specifications

Motor rated output [W]				200	
Ball screw lead [mm]				6	4
Rated thrust *1 [N]				536	804
Instantaneous maximum thrust *2 [N]				1,600	2,400
Brake retention [N]				536	804
Rated speed *3 [mm/s]				300	200
Positioning repeatability [mm]				±0.010	
Lost motion [mm]				0.1	
Rod non-rotational accuracy [°]				±1	
Maximum load capacity *4 [kg]	Acceleration and deceleration rate	Horizontal mount	0.3G	50	55
		Vertical mount	0.3G	20	20
Running life *5 [km]				5,000	

*1 At rated motor torque.
*2 Dependent on permissible axial load.
*3 At rated motor speed.
*4 At rated speed.
*5 Conditions: Under maximum load capacity (with LM guide), at rated speed, 0.3G acceleration and deceleration rate.

Dimensions

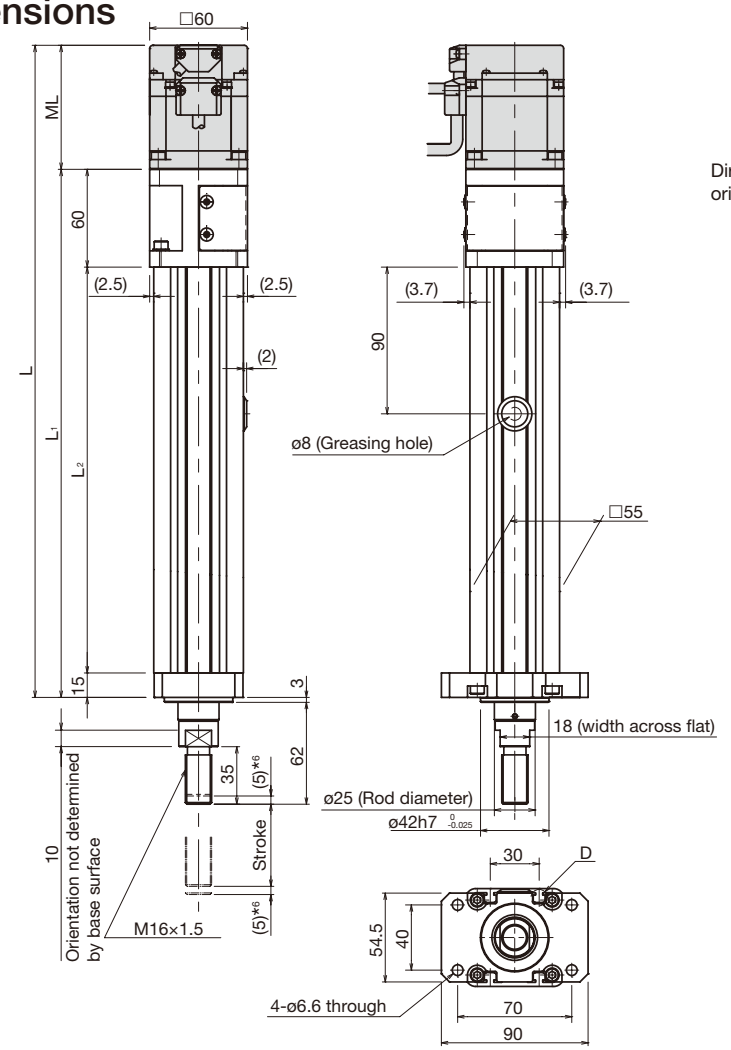

Direct motor coupling type with motor cable orientation right (R).

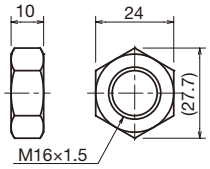

Hexagonal Nut (×1)

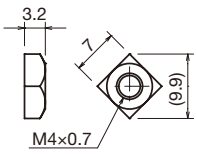

Square Nut (×8)

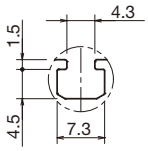

Section D (detail)

*6 Stroke up to mechanical stopper.

Stroke [mm] (Stroke between mechanical stoppers)		50 (60)	100 (110)	150 (160)	200 (210)	250 (260)	300 (310)
Maximum speed *7 [mm/s]	Ball screw lead: 6mm	300			260	200	160
	Ball screw lead: 4mm	200				160	130
Dimensions *8 [mm]	L	400.1 (434.7)	450.1 (484.7)	500.1 (534.7)	550.1 (584.7)	600.1 (634.7)	650.1 (684.7)
	L_1	324	374	424	474	524	574
	L_2	249	299	349	399	449	499
	ML	76.1 (110.7)					
Weight *8 [kg]	With motor	3.8 (4.3)	4.1 (4.6)	4.5 (5.0)	4.8 (5.3)	5.1 (5.6)	5.4 (5.9)

*7 Dependent on motor speed (at 3,000min^{-1}) and permissible rotational speed of the ball screw.
*8 Values when brake is installed are shown in parentheses.

PCT25R

Press series
Rod diameter: 25mm, Motor wrap, 200W type

Specifications

Motor rated output [W]				200	
Ball screw lead [mm]				6	4
Rated thrust *1 [N]				536	804
Instantaneous maximum thrust *2 [N]				1,600	2,400
Brake retention [N]				536	804
Rated speed *3 [mm/s]				300	200
Positioning repeatability [mm]				±0.010	
Lost motion [mm]				0.1	
Rod non-rotational accuracy [°]				±1	
Maximum load capacity *4 [kg]	Acceleration and deceleration rate	Horizontal mount	0.3G	50	55
		Vertical mount	0.3G	20	20
Running life *5 [km]				5,000	

*1 At rated motor torque.
*2 Dependent on permissible axial load.
*3 At rated motor speed.
*4 At rated speed.
*5 Conditions: Under maximum load capacity (with LM guide), at rated speed, 0.3G acceleration and deceleration rate.

Dimensions

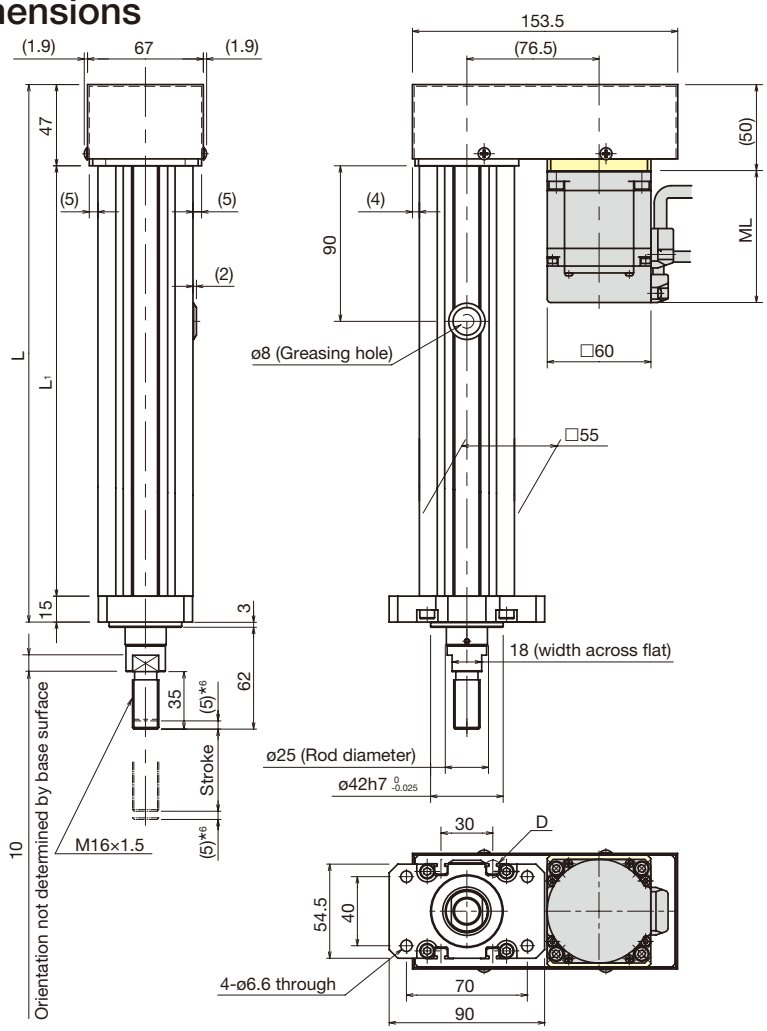

Motor wrap type with motor cable orientation right (R).

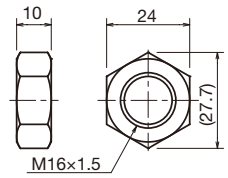

Hexagonal Nut (×1)

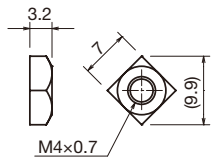

Square Nut (×8)

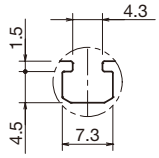

Section D (detail)

*6 Stroke up to mechanical stopper.

Stroke [mm] (Stroke between mechanical stoppers)		50 (60)	100 (110)	150 (160)	200 (210)	250 (260)	300 (310)
Maximum speed *7 [mm/s]	Ball screw lead: 6mm	300			260	200	160
	Ball screw lead: 4mm	200				160	130
Dimensions *8 [mm]	L	311	361	411	461	511	561
	L_1	249	299	349	399	449	499
	ML	76.1 (110.7)					
Weight *8 [kg]	With motor	4.0 (4.5)	4.3 (4.8)	4.7 (5.2)	5.0 (5.5)	5.3 (5.8)	5.7 (6.2)

*7 Dependent on motor speed (at 3,000min^{-1}) and permissible rotational speed of the ball screw.
*8 Values when brake is installed are shown in parentheses.

PC Model Configuration

Model		Lead, reduction ratio		Stroke		Design symbol		Greasing position		Applicable motor (control device)		Motor cable orientation
PC30	-	06A	-	0050		A	-	D	-	M040BM	-	U
(1)		(2)		(3)		(4)		(5)		(6)		(7)
PC30		06A		0050 : 50mm		A		D : Down		0M : Without motor		U : Up
PC40		06B		0100 : 100mm				L : Left		0Y : Without motor		L : Left
PC40H		08C		0150 : 150mm				R : Right		0S : Without motor		R : Right
PC50		06D		0200 : 200mm						M040M : With motor		
PC60		10E		0250 : 250mm						to		
PC60H		10F								M750BS : With motor and driver (with brake)		
PC80L		12G										
PC80												
PC80H												

These symbols represent lead and reduction ratio. Select from the applicable motor (control device) list by model (→ P.18).

These symbols represent applicable motors.
"M", "Y" or "S" at the end of the symbol represents the motor manufacturer.
M: Mitsubishi Electric Corporation
Y: Yaskawa Electric Corporation
S: Sanyo Denki Co., Ltd.

When motor and driver are required
Select from the applicable motor (control device) list symbols by model (→P.18).
A driver and cables (5m each) are shipped with the PC main unit.

When motor is not required
Select a symbol from "0M", "0Y", and "0S".
Parts for mounting the applicable motor (motor mounting plate, mechanical lock, pulley) are included by model.

Note) If you want a network-supported servo amp/servo pack, contact THK.

Greasing position orientation

Greasing position		Down	Left	Right
Symbol		D	L	R
Greasing position schematic diagram (Seen from rod side)	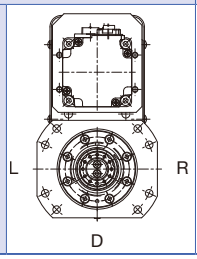	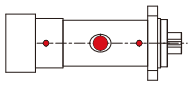	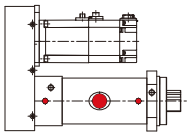	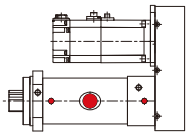

Motor cable orientation

* With motor and driver

Motor cable orientation	Upper	Left	Right
Symbol	U	L	R
Motor cable orientation schematic diagram (Seen from side A)	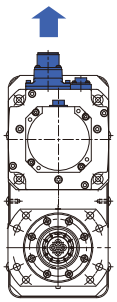	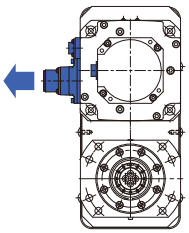	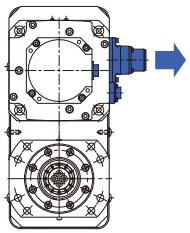

Motor cable orientation

Accessory Shipped with the Main Unit

* With motor and driver

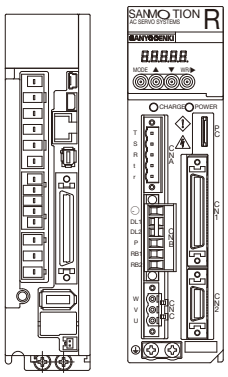

Servo amp

or

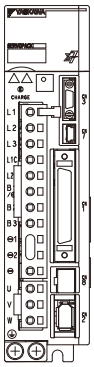

Servo pack

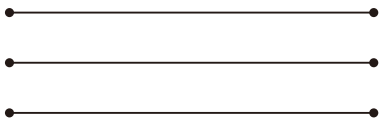

Various (5m) cables including motor power cable, encoder cable, brake cable, motor power/ brake cable

PC main unit

Applicable motor (control device) list by model

Model, lead, reduction ratio	Symbol *1	Servo motor	Servo amp/servo pack	Encoder cable (5m)	Motor cable (5m)	Brake cable (5m)	External regeneration resistor
PC30-06A	M040M	HG-KR43	MR-J4-40A	MR-J3ENCBL5M-A1-L	MR-PWS1CBL5M-A1-L	-	-
	M040BM	HG-KR43B				MR-BKS1CBL5M-A1-L	-
	M040Y	SGM7J-04AFA21	SGD7S-2R8A00A	JZSP-C7PI0D-05-E	JZSP-C7M20F-05-E	-	-
	M040BY	SGM7J-04AFA2C			JZSP-C7M23F-05-E *2		-
	M040S	R2AA06040FXHC0	RS1L03AC	RS-CA3-05-R	RS-CM3-05-R	-	-
	M040BS	R2AA06040FCHC0				RS-CB3-05-R	-
PC40-06B	M075M	HG-KR73	MR-J4-70A	MR-J3ENCBL5M-A1-L	MR-PWS1CBL5M-A1-L	-	-
	M075BM	HG-KR73B				MR-BKS1CBL5M-A1-L	-
	M075Y	SGM7J-08AFA21	SGD7S-5R5A00A	JZSP-C7PI0D-05-E	JZSP-C7M30F-05-E	-	-
	M075BY	SGM7J-08AFA2C			JZSP-C7M33F-05-E *2		-
	M075S	R2AA08075FXHC0	RS1L03AC	RS-CA3-05-R	RS-CM3-05-R	-	-
	M075BS	R2AA08075FCHC0				RS-CB3-05-R	-
PC40H-08C	M100M	HG-SR102	MR-J4-100A	MR-J3ENSCBL5M-L	SVPM-J3HF3-A-5 *3	-	-
	M100BM	HG-SR102B				SVPM-J3HF2B-A-5 *3	-
	M085Y	SGM7G-09AFA21	SGD7S-7R6A00A	JZSP-CVP01-05-E	JZSP-UVA101-05-E *4	-	-
	M085BY	SGM7G-09AFA2C			JZSP-UVA131-05-E *5		-
	M120S	R2AA13120BXHC0	RS1L03AC	AL-00918637-05	AL-00918631-05	-	-
	M120BS	R2AA13120BCHC0			AL-00918632-05		-
PC50-06D	M150M	HG-SR152	MR-J4-200A	MR-J3ENSCBL5M-L	SVPM-J3HF3-A-5 *3	-	-
	M150BM	HG-SR152B				SVPM-J3HF2B-A-5 *3	-
	M130Y	SGM7G-13AFA21	SGD7S-120A00A	JZSP-CVP01-05-E	JZSP-UVA101-05-E *4	-	-
	M130BY	SGM7G-13AFA2C			JZSP-UVA131-05-E *5		-
	M180S	R2AA13180HXHC0	RS1A05AC	AL-00918637-05	AL-00918633-05	-	-
	M180BS	R2AA13180HCHC0			AL-00918634-05		-
PC60-10E	M200M	HG-SR202	MR-J4-200A	MR-J3ENSCBL5M-L	SVPM-J3HF5-A-5 *3	-	-
	M200BM	HG-SR202B				SVPM-J3HF2B-A-5 *3	-
	M180Y	SGM7G-20AFA21	SGD7S-180A00A	JZSP-CVP01-05-E	JZSP-UVA301-05-E *4	-	-
	M180BY	SGM7G-20AFA2C			JZSP-UVA331-05-E *5		-
	M200S	R2AA13200LXHC0	RS1A05AC	AL-00918637-05	AL-00918633-05	-	-
	M200BS	R2AA13200LCHC0			AL-00918634-05		-
PC60H-10F	M350M	HG-SR352	MR-J4-350A	MR-J3ENSCBL5M-L	SVPM-J3HF6-A-5 *3	-	-
	M350BM	HG-SR352B				SVPM-J3HF2B-A-5 *3	-
	M290Y	SGM7G-30AFA21	SGD7S-330A00A	JZSP-CVP01-05-E	JZSP-UVA701-05-E *4	-	-
	M290BY	SGM7G-30AFA2C			JZSP-UVA731-05-E *5		-
	M350S	R2AA18350LXHC0 *6	RS1A10AC	AL-00918637-05	AL-00918635-05	-	-
	M350BS	R2AA18350LCHC0 *6			AL-00918636-05		-
PC80L-12G	M500M	HG-SR502	MR-J4-500A	MR-J3ENSCBL5M-L	SVPM-J3HF6-A-5 *3	-	-
	M500BM	HG-SR502B				SVPM-J3HF2B-A-5 *3	-
	M440Y	SGM7G-44AFA21	SGD7S-330A00A	JZSP-CVP01-05-E	JZSP-UVA701-05-E *4	-	-
	M440BY	SGM7G-44AFA2C			JZSP-UVA731-05-E *5		-
	M450S	R2AA18450HXHC0	RS1A15AC	AL-00918637-05	AL-00918635-05	-	-
	M450BS	R2AA18450HCHC0			AL-00918636-05 *2		-
PC80-12G	M700M	HG-SR702	MR-J4-700A	MR-J3ENSCBL5M-L	SVPM-J3HF8-A-5 *3	-	-
	M700BM	HG-SR702B				SVPM-J3HF2B-A-5 *3	-
	M550Y	SGM7G-55AFA21	SGD7S-470A00A	JZSP-CVP01-05-E	JZSP-UVAA01-05-E *4	-	JUSP-RA04-E *7
	M550BY	SGM7G-55AFA2C			JZSP-UVAA31-05-E *5		
	M550S	R2AA18550HXHC0	RS1A30AC	AL-00918637-05	AL-00918629-05	-	REGIST-1000W6R7B *7
	M550BS	R2AA18550HCHC0				AL-00918630-05	
PC80H-12G	M420M	HG-SR421	MR-J4-500A	MR-J3ENSCBL5M-L	SVPM-J3HF8-A-5 *3	-	-
	M420BM	HG-SR421B				SVPM-J3HF2B-A-5 *3	-
	M750Y	SGM7G-75AFA21	SGD7S-550A00A	JZSP-CVP01-05-E	JZSP-UVAA01-05-E *4	-	JUSP-RA05-E *7
	M750BY	SGM7G-75AFA2C			JZSP-UVAA31-05-E *5		
	M750S	R2AA18750HXHC0	RS1A30AC	AL-00918637-05	AL-00918629-05	-	REGIST-1000W6R7B *7
	M750BS	R2AA18750HCHC0				AL-00918630-05	

*1 "M", "Y" or "S" at the end of the symbol represents the motor manufacturer. M: Mitsubishi Electric Corporation, Y: Yaskawa Electric Corporation, S: Sanyo Denki Co., Ltd.
*2 Motor cable and brake cable are integrated together
*3 Manufactured by Misumi Corporation
*4 Manufactured by Yaskawa Controls Co., LTD.
*5 Each model for a set of a motor cable and brake cable: Manufactured by Yaskawa Controls Co., LTD.
*6 PC specification special product (output shaft length differs from the manufacturer's catalog.)
*7 Servo amps and servo packs require an external regeneration resistor as they do not have a built-in regeneration resistor.

PC30-06A

Press series
Rod outer diameter: 30mm, Rated thrust: 1.6kN

Specifications

Servo motor	Motor symbol	TH	M040 (B)M	M040 (B)Y	M040 (B)S
	Manufacturer	-	Mitsubishi Electric Corporation	Yaskawa Electric Corporation	Sanyo Denki Co., Ltd.
	Model	THC: M40	HG-KR43	SGM7J-04	R2AA06040F
	Rated output [kW]	0.4	0.4	0.4	0.4
Ball screw lead [mm]		6			
Reduction ratio		28/40			
Rated thrust *1 [kN]		1.6			
Instantaneous maximum thrust *2 [kN]		3.3			
Maximum speed *3 [mm/s]		210			
Acceleration and deceleration rate *4 [G]		0.3			
Permissible axial load *5 [kN]	Pressing direction	3.3			
	Tensile direction	1.6			
Positioning repeatability [mm]		±0.005			
Backlash [mm]		0.020			
Permissible input torque *6 [N·m]		2.6			
Maximum load capacity *7 [kg]		15			

*1 At rated motor torque.
*2 Dependent on permissible axial load.
*3 At rated motor revolution.
*4 When maximum load capacity is applied.
*5 Load that can be applied to the actuator when static.
*6 To prevent mechanical damage, motor must be operated within this limit.
*7 When actuator is positioned vertically with rod reaching lower end.

Dimensions

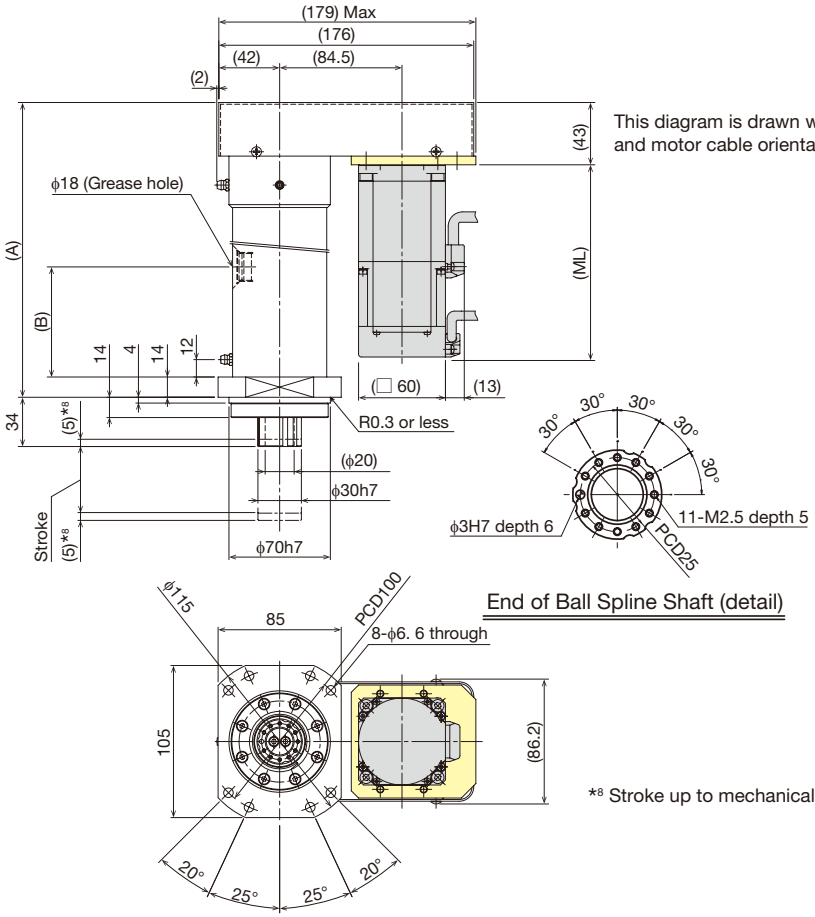

This diagram is drawn with greasing position down (D) and motor cable orientation up (U).

*8 Stroke up to mechanical stopper.

Stroke (mm) (Stroke between mechanical stoppers)			50 (60)	100 (110)	150 (160)	200 (210)	250 (260)
Dimensions [mm]	A		203.5	253.5	303.5	353.5	403.5
	B		67	80	130	180	230
	ML	THC: M40 (M40B) *9	98.1 (132.7)				
		M040M (M040BM) *9 *10	98.3 (135.1)				
		M040Y (M040BY) *9 *10	85.5 (126)				
		M040S (M040BS) *9 *10	95.5 (123.5)				
Weight [kg]	THC: M40 (M40B) *9		8.1 (8.6)	9.2 (9.7)	10.3 (10.8)	11.4 (11.9)	12.6 (13.1)
	M040M (M040BM) *9 *10		8.2 (8.6)	9.3 (9.7)	10.4 (10.8)	11.5 (11.9)	12.7 (13.1)
	M040Y (M040BY) *9 *10		7.9 (8.5)	9.0 (9.6)	10.1 (10.7)	11.2 (11.8)	12.4 (13.0)
	M040S (M040BS) *9 *10		8.1 (8.5)	9.2 (9.6)	10.3 (10.7)	11.4 (11.8)	12.6 (13.0)

*9 Values when a brake is installed are shown in parentheses.
*10 "M", "Y" or "S" at the end of the model number represents the motor manufacturer.
M: Mitsubishi Electric Corporation, Y: Yaskawa Electric Corporation, S: Sanyo Denki Co., Ltd.

PC40-06B

Press series
Rod outer diameter: 40mm, Rated thrust: 3.2kN

Specifications

Servo motor	Motor symbol	TH	M075 (B)M	M075 (B)Y	M075 (B)S
	Manufacturer	-	Mitsubishi Electric Corporation	Yaskawa Electric Corporation	Sanyo Denki Co., Ltd.
	Model	THC: M75	HG-KR73	SGM7J-08	R2AA08075F
	Rated output [kW]	0.75	0.75	0.75	0.75
Ball screw lead [mm]		6			
Reduction ratio		32/48			
Rated thrust *1 [kN]		3.2			
Instantaneous maximum thrust *2 [kN]		6.4			
Maximum speed *3 [mm/s]		200			
Acceleration and deceleration rate *4 [G]		0.3			
Permissible axial load *5 [kN]	Pressing direction	6.4			
	Tensile direction	3.2			
Positioning repeatability [mm]		±0.005			
Backlash [mm]		0.020			
Permissible input torque *6 [N·m]		4.8			
Maximum load capacity *7 [kg]		25			

*1 At rated motor torque.
*2 Dependent on permissible axial load.
*3 At rated motor revolution.
*4 When maximum load capacity is applied.
*5 Load that can be applied to the actuator when static.
*6 To prevent mechanical damage, motor must be operated within this limit.
*7 When actuator is positioned vertically with rod reaching lower end.

Dimensions

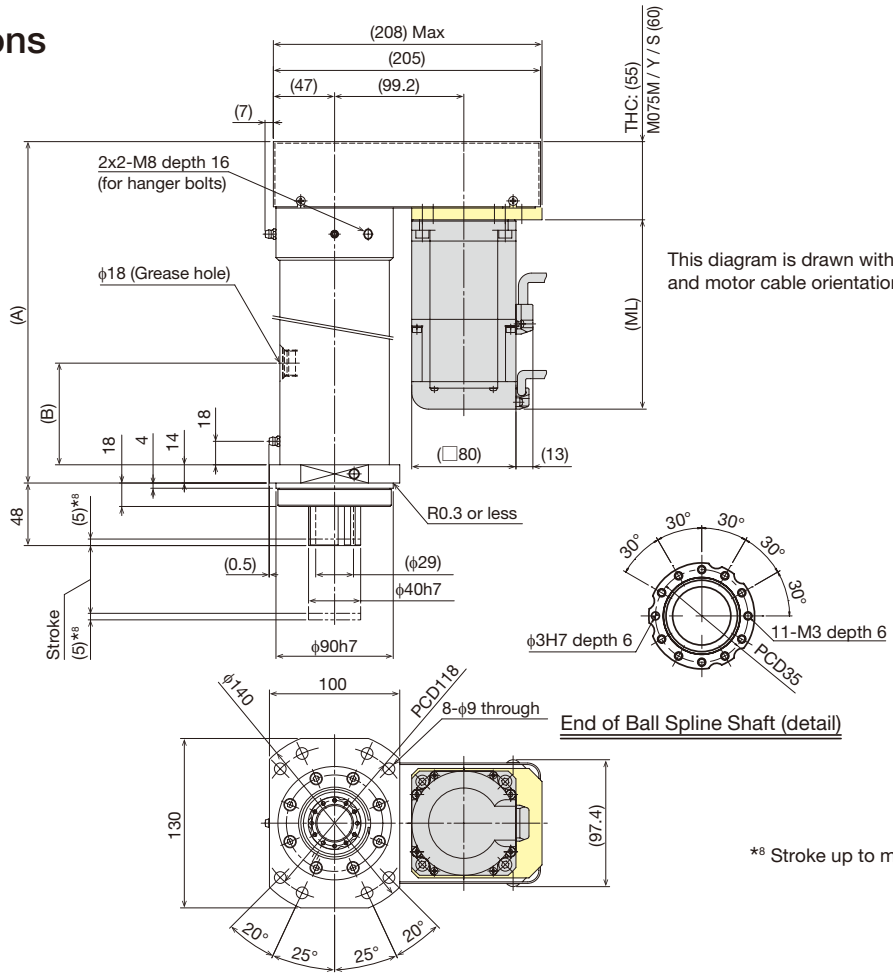

This diagram is drawn with greasing position down (D) and motor cable orientation up (U).

*8 Stroke up to mechanical stopper.

Stroke [mm] (Stroke between mechanical stoppers)			50 (60)	100 (110)	150 (160)	200 (210)	250 (260)
Dimensions [mm]	A		237	287	337	387	437
	B		83	93	143	193	243
	ML	THC: M75 (M75B) *9	108.7 (145.3)				
		M075M (M075BM) *9 *10	112 (152.3)				
		M075Y (M075BY) *9 *10	97 (144)				
		M075S (M075BS) *9 *10	107.3 (143)				
Weight [kg]	THC: M75 (M75B) *9		13.5 (14.4)	15.1 (16.0)	16.6 (17.5)	18.1 (19.0)	19.6 (20.5)
	M075M (M075BM) *9 *10		13.8 (14.8)	15.4 (16.4)	16.9 (17.9)	18.4 (19.4)	19.9 (20.9)
	M075Y (M075BY) *9 *10		13.2 (13.8)	14.8 (15.4)	16.3 (16.9)	17.8 (18.4)	19.3 (19.9)
	M075S (M075BS) *9 *10		13.6 (14.5)	15.2 (16.1)	16.7 (17.6)	18.2 (19.1)	19.7 (20.6)

*9 Values when a brake is installed are shown in parentheses.
*10 "M", "Y" or "S" at the end of the model number represents the motor manufacturer.
M: Mitsubishi Electric Corporation, Y: Yaskawa Electric Corporation, S: Sanyo Denki Co., Ltd.

PC40H-08C

Press series

Rod outer diameter: 40mm, Rated thrust: 5.6 - 6.7kN

Specifications

Servo motor	Motor symbol	M100 (B)M	M085 (B)Y	M120 (B)S
	Manufacturer	Mitsubishi Electric Corporation	Yaskawa Electric Corporation	Sanyo Denki Co., Ltd.
	Model	HG-SR102	SGM7G-09	R2AA13120B
	Rated output [kW]	1	0.85	1.2
Ball screw lead [mm]		8		
Reduction ratio		25/44		
Rated thrust *1 [kN]		5.6	6.3	6.7
Instantaneous maximum thrust *2 [kN]		11.2		
Maximum speed *3 [mm/s]		151	113	151
Acceleration and deceleration rate *4 [G]		0.1		
Permissible axial load *5 [kN]	Pressing direction	11.2		
	Tensile direction	5.6		
Positioning repeatability [mm]		±0.005		
Backlash [mm]		0.020		
Permissible input torque *6 [N·m]		9.5		
Maximum load capacity *7 [kg]		50		

*1 At rated motor torque.
*2 Dependent on permissible axial load.
*3 At rated motor revolution.
*4 When maximum load capacity is applied.
*5 Load that can be applied to the actuator when static.
*6 To prevent mechanical damage, motor must be operated within this limit.
*7 When actuator is positioned vertically with rod reaching lower end.

Dimensions

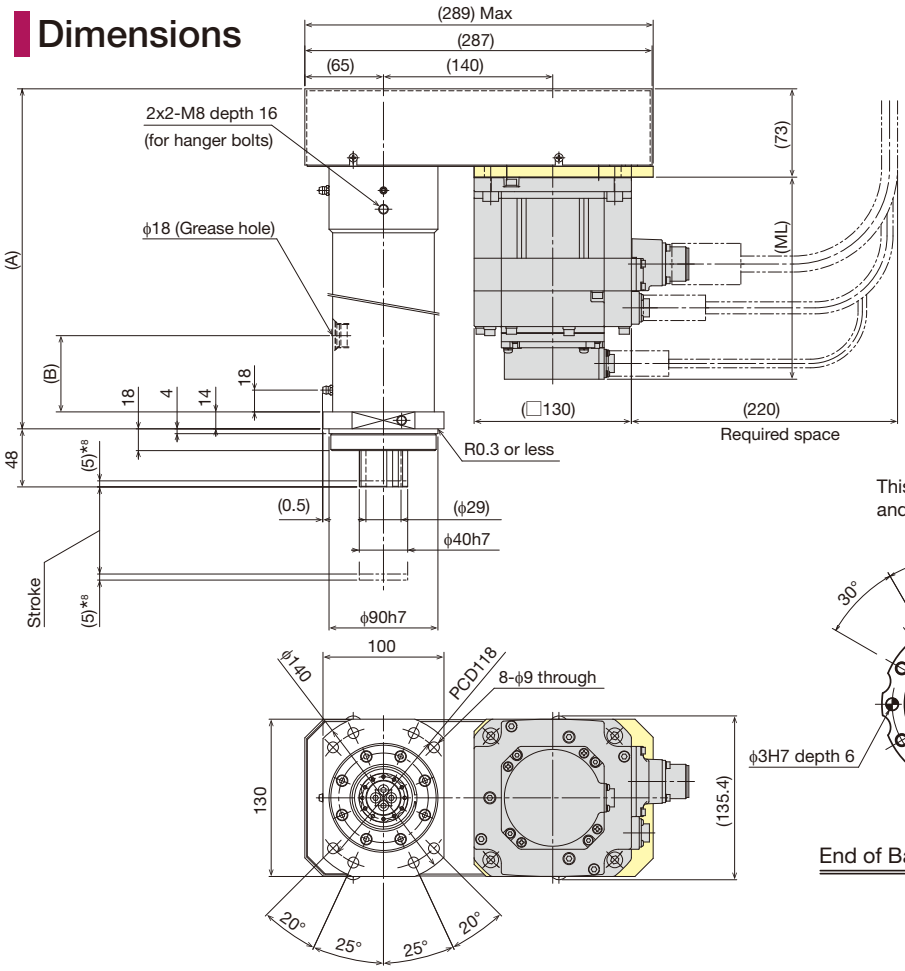

This diagram is drawn with greasing position down (D) and motor cable orientation up (U).

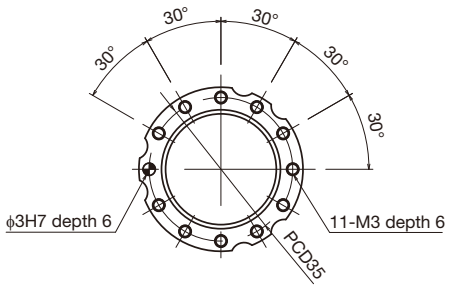

End of Ball Spline Shaft (detail)

*8 Stroke up to mechanical stopper.

Stroke [mm] (Stroke between mechanical stoppers)			50 (60)	100 (110)	150 (160)	200 (210)	250 (260)
Dimensions [mm]	A		271	321	371	421	471
	B		83	93	113	163	213
	ML	M100M (M100BM) *9 *10	132.5 (167)				
		M085Y (M085BY) *9 *10	137 (173)				
		M120S (M120BS) *9 *10	120.5 (160)				
Weight [kg]	M100M (M100BM) *9 *10		21.8 (23.8)	23.4 (25.4)	25.0 (27.0)	26.6 (28.6)	28.2 (30.2)
	M085Y (M085BY) *9 *10		21.1 (23.1)	22.7 (24.7)	24.3 (26.3)	25.9 (27.9)	27.5 (29.5)
	M120S (M120BS) *9 *10		21.7 (23.6)	23.3 (25.2)	24.9 (26.8)	26.5 (28.4)	28.1 (30.0)

*9 Values when brake is installed are shown in parentheses.
*10 "M", "Y" or "S" at the end of the model number represents the motor manufacturer.
M: Mitsubishi Electric Corporation, Y: Yaskawa Electric Corporation, S: Sanyo Denki Co., Ltd.

PC50-06D

Press series

Rod outer diameter: 50mm, Rated thrust: 8.4 - 10.2kN

Specifications

Servo motor	Motor symbol	M150 (B)M	M130 (B)Y	M180 (B)S
	Manufacturer	Mitsubishi Electric Corporation	Yaskawa Electric Corporation	Sanyo Denki Co., Ltd.
	Model	HG-SR152	SGM7G-13	R2AA13180H
	Rated output [kW]	1.5	1.3	1.8
Ball screw lead [mm]		6		
Reduction ratio		30/40		
Rated thrust *1 [kN]		8.4	9.8	10.2
Instantaneous maximum thrust *2 [kN]		16.8		
Maximum speed *3 [mm/s]		150	112	150
Acceleration and deceleration rate *4 [G]		0.1		
Permissible axial load *5 [kN]	Pressing direction	16.8		
	Tensile direction	8.4		
Positioning repeatability [mm]		±0.005		
Backlash [mm]		0.020		
Permissible input torque *6 [N·m]		14.3		
Maximum load capacity *7 [kg]		75		

*1 At rated motor torque.
*2 Dependent on permissible axial load.
*3 At rated motor revolution.
*4 When maximum load capacity is applied.
*5 Load that can be applied to the actuator when static.
*6 To prevent mechanical damage, motor must be operated within this limit.
*7 When actuator is positioned vertically with rod reaching lower end.

Dimensions

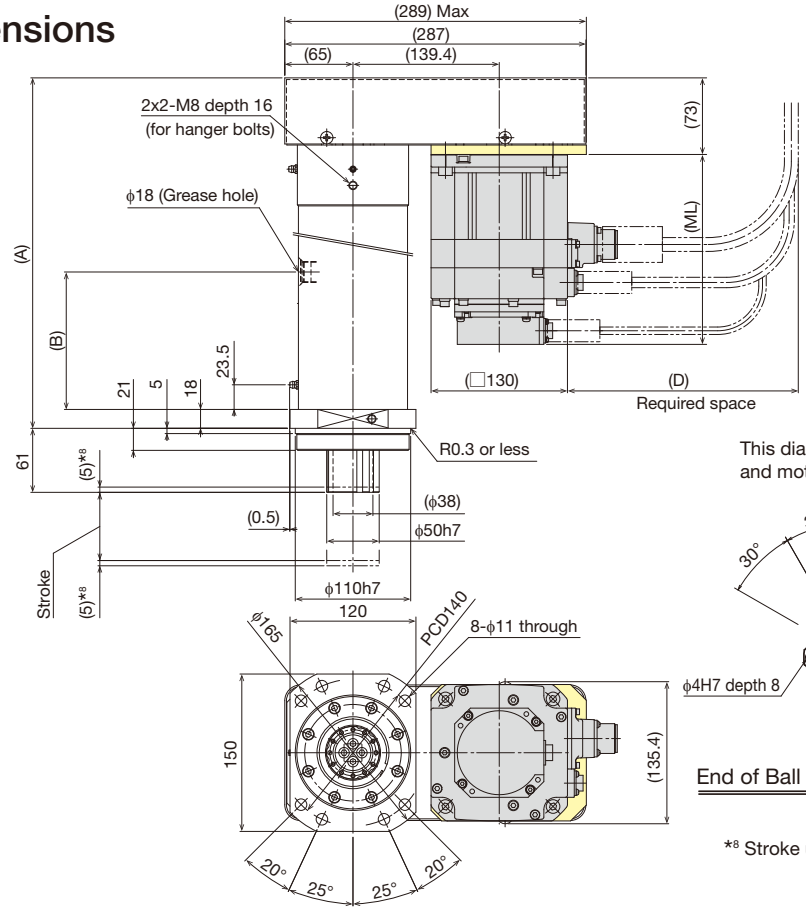

This diagram is drawn with greasing position down (D) and motor cable orientation up (U).

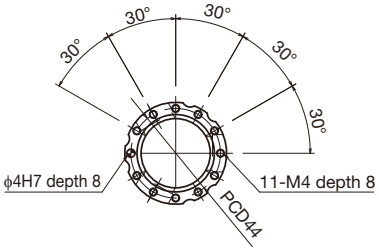

End of Ball Spline Shaft (detail)

*8 Stroke up to mechanical stopper.

Stroke [mm] (Stroke between mechanical stoppers)			50 (60)	100 (110)	150 (160)	200 (210)	250 (260)
Dimensions [mm]	A		294	344	394	444	494
	B		101		111	161	211
	ML	M150M (M150BM) *9 *10	146.5 (181)				
		M130Y (M130BY) *9 *10	153 (189)				
		M180S (M180BS) *9 *10	138 (179)				
	D	M150M (M150BM) *10	220				
		M130Y (M130BY) *10	220				
		M180S (M180BS) *10	250				
Weight [kg]	M150M (M150BM) *9 *10		29.1 (31.1)	31.6 (33.6)	34.0 (36.0)	36.5 (38.5)	39.0 (41.0)
	M130Y (M130BY) *9 *10		28.9 (30.8)	31.4 (33.3)	33.8 (35.7)	36.3 (38.2)	38.8 (40.7)
	M180S (M180BS) *9 *10		29.8 (31.0)	32.3 (33.5)	34.7 (35.9)	37.2 (38.4)	39.7 (40.9)

*9 Values when brake is installed are shown in parentheses.
*10 "M", "Y" or "S" at the end of the model number represents the motor manufacturer.
M: Mitsubishi Electric Corporation, Y: Yaskawa Electric Corporation, S: Sanyo Denki Co., Ltd.

PC60-10E

Press series

Rod outer diameter: 60mm, Rated thrust: 10.9 - 13.1kN

Specifications

Servo motor	Motor symbol	M200 (B)M	M180 (B)Y	M200 (B)S
	Manufacturer	Mitsubishi Electric Corporation	Yaskawa Electric Corporation	Sanyo Denki Co., Ltd.
	Model	HG-SR202	SGM7G-20	R2AA13200L
	Rated output [kW]	2	1.8	2
Ball screw lead [mm]		10		
Reduction ratio		28/60		
Rated thrust *1 [kN]		10.9	13.1	10.9
Instantaneous maximum thrust *2 [kN]		21.8		
Maximum speed *3 [mm/s]		155	116	155
Acceleration and deceleration rate *4 [G]		0.1		
Permissible axial load *5 [kN]	Pressing direction	21.8		
	Tensile direction	10.9		
Positioning repeatability [mm]		±0.005		
Backlash [mm]		0.020		
Permissible input torque *6 [N·m]		19.1		
Maximum load capacity *7 [kg]		100		

*1 At rated motor torque.
*2 Dependent on permissible axial load.
*3 At rated motor revolution.
*4 When maximum load capacity is applied.
*5 Load that can be applied to the actuator when static.
*6 To prevent mechanical damage, motor must be operated within this limit.
*7 When actuator is positioned vertically with rod reaching lower end.

Dimensions

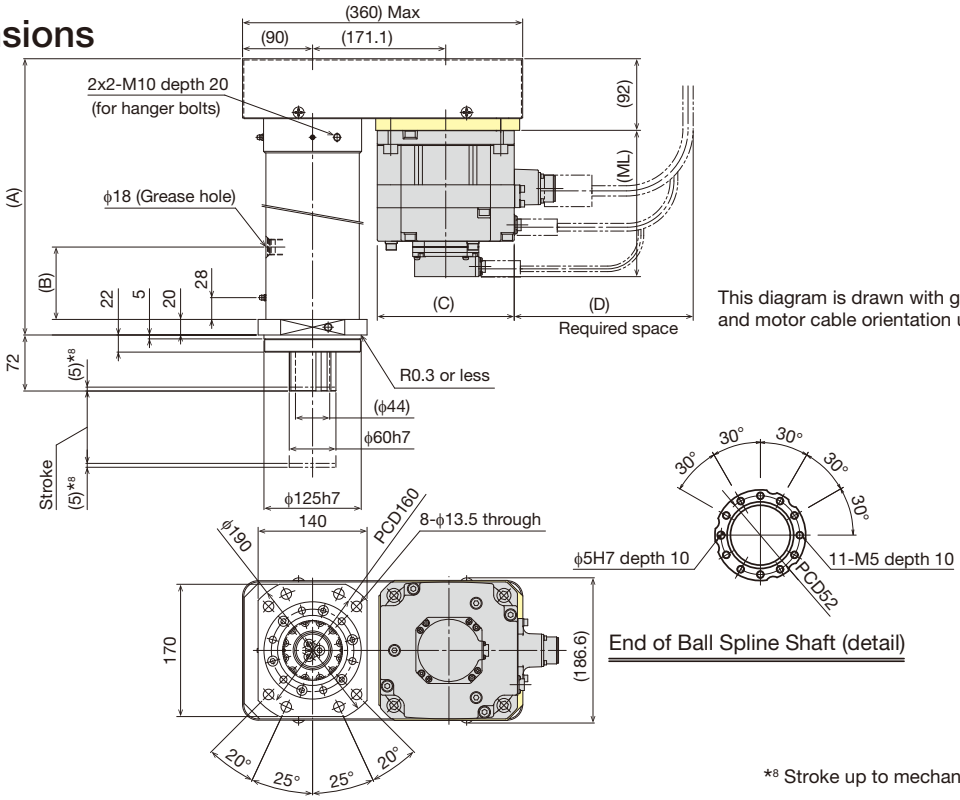

This diagram is drawn with greasing position down (D) and motor cable orientation up (U).

*8 Stroke up to mechanical stopper.

Stroke [mm] (Stroke between mechanical stoppers)			50 (60)	100 (110)	150 (160)	200 (210)	250 (260)
Dimensions [mm]	A		305	355	405	455	505
	B		113			163	213
	ML	M200M (M200BM) *9 *10	138.5 (188)				
		M180Y (M180BY) *9 *10	171 (207)				
		M200S (M200BS) *9 *10	171 (216)				
	C	M200M (M200BM) *10	□176				
		M180Y (M180BY) *10	□130				
		M200S (M200BS) *10	□130				
	D	M200M (M200BM) *10	230				
		M180Y (M180BY) *10	240				
		M200S (M200BS) *10	250				
Weight [kg]	M200M (M200BM) *9 *10		47.4 (53.4)	50.9 (56.9)	54.4 (60.4)	58.0 (64.0)	61.5 (67.5)
	M180Y (M180BY) *9 *10		45.0 (47.4)	48.5 (50.9)	52.0 (54.4)	55.6 (58.0)	59.1 (61.5)
	M200S (M200BS) *9 *10		46.4 (48.4)	49.9 (51.9)	53.4 (55.4)	57.0 (59.0)	60.5 (62.5)

*9 Values when brake is installed are shown in parentheses.
*10 "M", "Y" or "S" at the end of the model number represents the motor manufacturer.
M: Mitsubishi Electric Corporation, Y: Yaskawa Electric Corporation, S: Sanyo Denki Co., Ltd.

PC60H-10F

Press series

Rod outer diameter: 60mm, Rated thrust: 17.8 - 19.8kN

Specifications

Servo motor	Motor symbol	M350 (B)M	M290 (B)Y	M350 (B)S
	Manufacturer	Mitsubishi Electric Corporation	Yaskawa Electric Corporation	Sanyo Denki Co., Ltd.
	Model	HG-SR352	SGM7G-30	R2AA18350L
	Rated output [kW]	3.5	2.9	3.5
Ball screw lead [mm]		10		
Reduction ratio		30/60		
Rated thrust *1 [kN]		17.8	19.8	18.1
Instantaneous maximum thrust *2 [kN]		35.6		
Maximum speed *3 [mm/s]		166	125	166
Acceleration and deceleration rate *4 [G]		0.1		
Permissible axial load *5 [kN]	Pressing direction	35.6		
	Tensile direction	17.8		
Positioning repeatability [mm]		±0.005		
Backlash [mm]		0.020		
Permissible input torque *6 [N·m]		33.4		
Maximum load capacity *7 [kg]		150		

*1 At rated motor torque.
*2 Dependent on permissible axial load.
*3 At rated motor revolution.
*4 When maximum load capacity is applied.
*5 Load that can be applied to the actuator when static.
*6 To prevent mechanical damage, motor must be operated within this limit.
*7 When actuator is positioned vertically with rod reaching lower end.

Dimensions

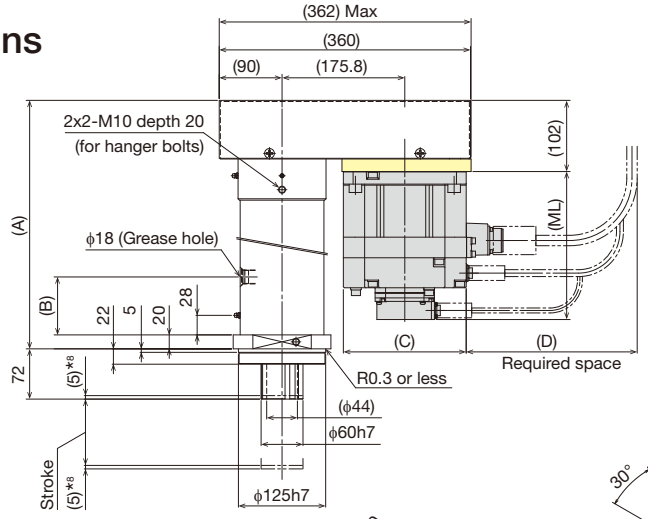

This diagram is drawn with greasing position down (D) and motor cable orientation up (U).

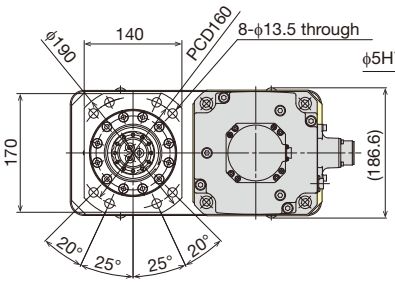

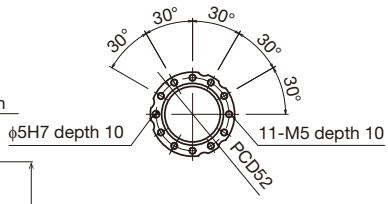

End of Ball Spline Shaft (detail)

*8 Stroke up to mechanical stopper.

Stroke [mm] (Stroke between mechanical stoppers)			50 (60)	100 (110)	150 (160)	200 (210)	250 (260)
Dimensions [mm]	A		349	399	449	499	549
	B		123			145	195
	ML	M350M (M350BM) *9 *10	162.5 (212)				
		M290Y (M290BY) *9 *10	160 (208)				
		M350S (M350BS) *9 *10	155 (205)				
	C	M350M (M350BM) *10	□176				
		M290Y (M290BY) *10	□180				
		M350S (M350BS) *10	□180				
	D	M350M (M350BM) *10	245				
		M290Y (M290BY) *10	285				
		M350S (M350BS) *10	300				
Weight [kg]	M350M (M350BM) *9 *10		57.2 (63.2)	60.7 (66.7)	64.3 (70.3)	67.8 (73.8)	71.3 (77.3)
	M290Y (M290BY) *9 *10		54.7 (60.7)	58.2 (64.2)	61.8 (67.8)	65.3 (71.3)	68.8 (74.8)
	M350S (M350BS) *9 *10		56.7 (61.2)	60.2 (64.7)	63.8 (68.3)	67.3 (71.8)	70.8 (75.3)

*9 Values when brake is installed are shown in parentheses.
*10 "M", "Y" or "S" at the end of the model number represents the motor manufacturer.
M: Mitsubishi Electric Corporation, Y: Yaskawa Electric Corporation, S: Sanyo Denki Co., Ltd.

PC80L-12G

Press series
Rod outer shape: 80mm, Rated thrust: 21 - 28kN

Specifications

Servo motor	Motor symbol	M500 (B)M	M440 (B)Y	M450 (B)S
	Manufacturer	Mitsubishi Electric Corporation	Yaskawa Electric Corporation	Sanyo Denki Co., Ltd.
	Model	HG-SR502	SGM7G-44	R2AA18450H
	Rated output [kW]	5	4.4	4.5
Ball screw lead [mm]		12		
Reduction ratio		40/90		
Rated thrust *1 [kN]		24	28	21
Instantaneous maximum thrust *2 [kN]		71	71	75
Maximum speed *3 [mm/s]		177	133	177
Acceleration and deceleration rate *4 [G]		0.1		
Permissible axial load *5 [kN]	Pressing direction	120		
	Tensile direction	48		
Positioning repeatability [mm]		±0.005		
Backlash [mm]		0.020		
Permissible input torque *6 [N·m]		120		
Maximum load capacity *7 [kg]		200		

*1 At rated motor torque.
*2 Dependent on permissible axial load.
*3 At rated motor revolution.
*4 When maximum load capacity is applied.
*5 Load that can be applied to the actuator when static.
*6 To prevent mechanical damage, motor must be operated within this limit.
*7 When actuator is positioned vertically with rod reaching lower end.

Dimensions

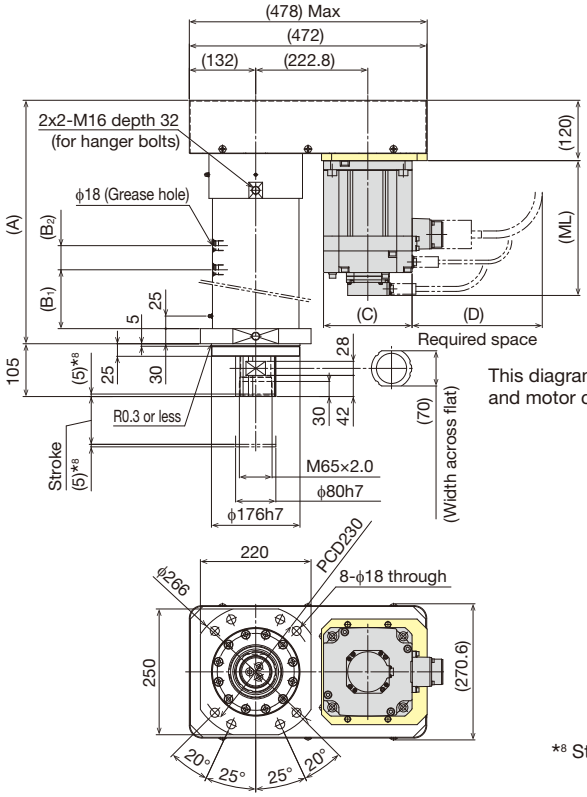

This diagram is drawn with greasing position down (D) and motor cable orientation up (U).

*8 Stroke up to mechanical stopper.

Stroke [mm] (Stroke between mechanical stoppers)			50 (60)	100 (110)	150 (160)	200 (210)	250 (260)
Dimensions [mm]	A		484	534	584	634	684
	B_1		117	119	121	171	221
	B_2		48	96	144		
	ML	M500M (M500BM) *9 *10	178.5 (228)				
		M440Y (M440BY) *9 *10	184 (232)				
		M450S (M450BS) *9 *10	172 (222)				
	C	M500M (M500BM) *10	□176				
		M440Y (M440BY) *10	□180				
		M450S (M450BS) *10					
	D	M500M (M500BM) *10	245				
		M440Y (M440BY) *10	285				
		M450S (M450BS) *10	380				
Weight [kg]	M500M (M500BM) *9 *10		133 (139)	140 (146)	146 (152)	153 (159)	160 (166)
	M440Y (M440BY) *9 *10		131 (137)	137 (143)	144 (150)	151 (157)	157 (163)
	M450S (M450BS) *9 *10		133 (135)	139 (142)	146 (149)	153 (155)	159 (168)

*9 Values when brake is installed are shown in parentheses.
*10 "M", "Y" or "S" at the end of the model number represents the motor manufacturer.
M: Mitsubishi Electric Corporation, Y: Yaskawa Electric Corporation, S: Sanyo Denki Co., Ltd.

PC80-12G

Press series
Rod outer shape: 80mm, Rated thrust: 33 - 35kN

Specifications

Servo motor	Motor symbol	M700 (B)M	M550 (B)Y	M550 (B)S
	Manufacturer	Mitsubishi Electric Corporation	Yaskawa Electric Corporation	Sanyo Denki Co., Ltd.
	Model	HG-SR702	SGM7G-55A	R2AA18550H
	Rated output [kW]	7	5.5	5.5
Ball screw lead [mm]		12		
Reduction ratio		40/90		
Rated thrust *1 [kN]		33	35	35
Instantaneous maximum thrust *2 [kN]		100	102	107
Maximum speed *3 [mm/s]		177	133	133
Acceleration and deceleration rate *4 [G]		0.1		
Permissible axial load *5 [kN]	Pressing direction	120		
	Tensile direction	48		
Positioning repeatability [mm]		±0.005		
Backlash [mm]		0.020		
Permissible input torque *6 [N·m]		120		
Maximum load capacity *7 [kg]		200		

*1 At rated motor torque.
*2 Dependent on permissible axial load.
*3 At rated motor revolution.
*4 When maximum load capacity is applied.
*5 Load that can be applied to the actuator when static.
*6 To prevent mechanical damage, motor must be operated within this limit.
*7 When actuator is positioned vertically with rod reaching lower end.

Dimensions

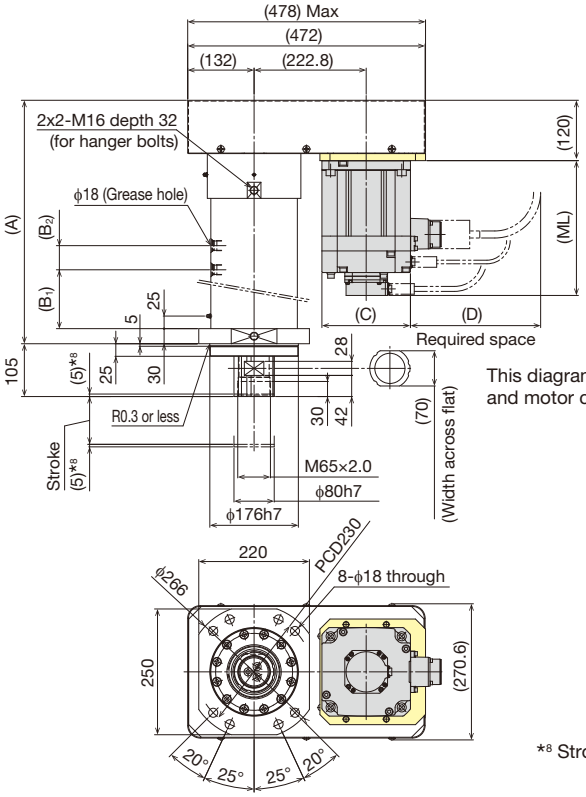

This diagram is drawn with greasing position down (D) and motor cable orientation up (U).

*8 Stroke up to mechanical stopper.

Stroke [mm] (Stroke between mechanical stoppers)			50 (60)	100 (110)	150 (160)	200 (210)	250 (260)
Dimensions [mm]	A		484	534	584	634	684
	B_1		117	119	121	171	221
	B_2		48	96	144		
	ML	M700M (M700BM) *9 *10	218.5 (268)				
		M550Y (M550BY) *9 *10	221 (265)				
		M550S (M550BS) *9 *10	228 (274)				
	C	M700M (M700BM) *10	□176				
		M550Y (M550BY) *10	□180				
		M550S (M550BS) *10					
	D	M700M (M700BM) *10	379				
		M550Y (M550BY) *10	432				
		M550S (M550BS) *10	505				
Weight [kg]	M700M (M700BM) *9 *10		140 (146)	147 (153)	153 (159)	160 (166)	167 (173)
	M550Y (M550BY) *9 *10		135 (141)	141 (147)	148 (154)	155 (161)	161 (167)
	M550S (M550BS) *9 *10		141 (144)	147 (150)	154 (157)	161 (164)	168 (170)

*9 Values when brake is installed are shown in parentheses.
*10 "M", "Y" or "S" at the end of the model number represents the motor manufacturer.
M: Mitsubishi Electric Corporation, Y: Yaskawa Electric Corporation, S: Sanyo Denki Co., Ltd.

PC80H-12G

Press series
Rod outer shape: 80mm, Rated thrust: 40 - 48kN

Specifications

Servo motor	Motor symbol	M420 (B)M	M750 (B)Y	M750 (B)S
	Manufacturer	Mitsubishi Electric Corporation	Yaskawa Electric Corporation	Sanyo Denki Co., Ltd.
	Model	HG-SR421	SGM7G-75	R2AA18750H
	Rated output [kW]	4.2	7.5	7.5
Ball screw lead [mm]		12		
Reduction ratio		40/90		
Rated thrust *1 [kN]		40	48	48
Instantaneous maximum thrust *2 [kN]		120	120	120
Maximum speed *3 [mm/s]		88	133	133
Acceleration and deceleration rate *4 [G]		0.1		
Permissible axial load *5 [kN]	Pressing direction	120		
	Tensile direction	48		
Positioning repeatability [mm]		±0.005		
Backlash [mm]		0.020		
Permissible input torque *6 [N·m]		120		
Maximum load capacity *7 [kg]		200		

*1 At rated motor torque.
*2 Dependent on permissible axial load.
*3 At rated motor revolution.
*4 When maximum load capacity is applied.
*5 Load that can be applied to the actuator when static.
*6 To prevent mechanical damage, motor must be operated within this limit.
*7 When actuator is positioned vertically with rod reaching lower end.

Dimensions

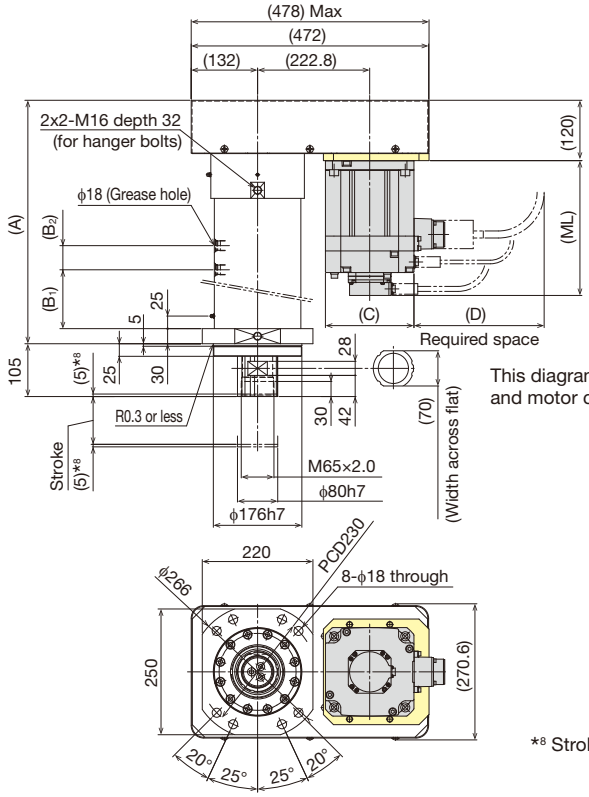

This diagram is drawn with greasing position down (D) and motor cable orientation up (U).

*8 Stroke up to mechanical stopper.

Stroke [mm] (Stroke between mechanical stoppers)			50 (60)	100 (110)	150 (160)	200 (210)	250 (260)
Dimensions [mm]	A		484	534	584	634	684
	B_1		117	119	121	171	221
	B_2		48	96	144		
	ML	M420M (M420BM) *9 *10	218.5 (268)				
		M750Y (M750BY) *9 *10	267 (311)				
		M750S (M750BS) *9 *10	273 (329)				
	C	M420M (M420BM) *10	□176				
		M750Y (M750BY) *10	□180				
		M750S (M750BS) *10					
	D	M420M (M420BM) *10	379				
		M750Y (M750BY) *10	432				
		M750S (M750BS) *10	505				
Weight [kg]	M420M (M420BM) *9 *10		140 (146)	147 (153)	153 (159)	160 (166)	167 (173)
	M750Y (M750BY) *9 *10		143 (148)	149 (155)	156 (161)	163 (168)	169 (175)
	M750S (M750BS) *9 *10		149 (153)	155 (160)	162 (167)	169 (173)	176 (180)

*9 Values when brake is installed are shown in parentheses.
*10 "M", "Y" or "S" at the end of the model number represents the motor manufacturer.
M: Mitsubishi Electric Corporation, Y: Yaskawa Electric Corporation, S: Sanyo Denki Co., Ltd.

PC Theoretical pressing force running life (number of presses)

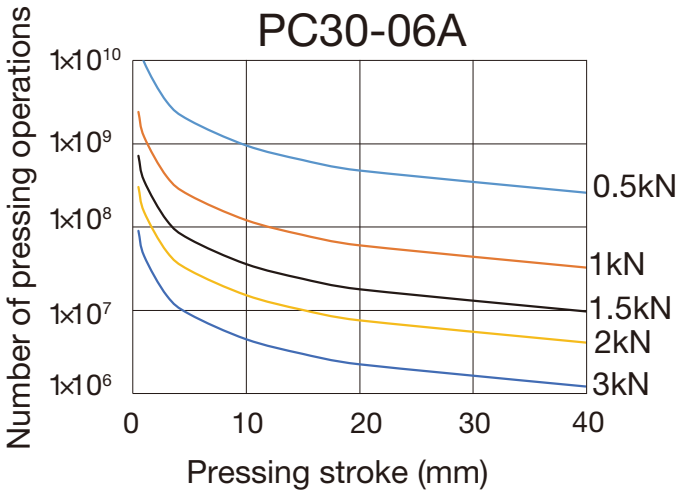

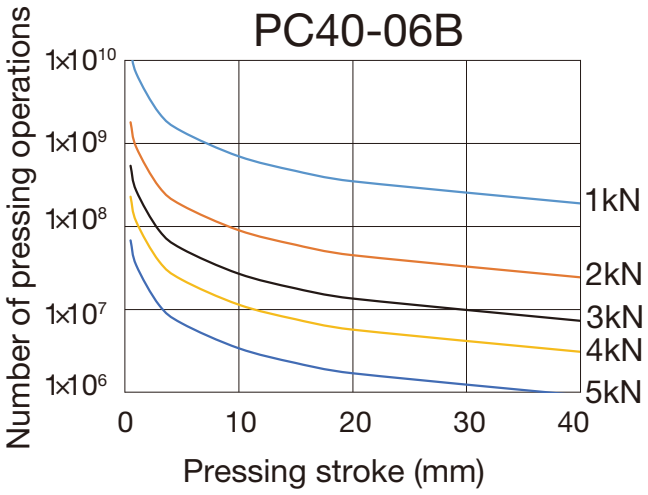

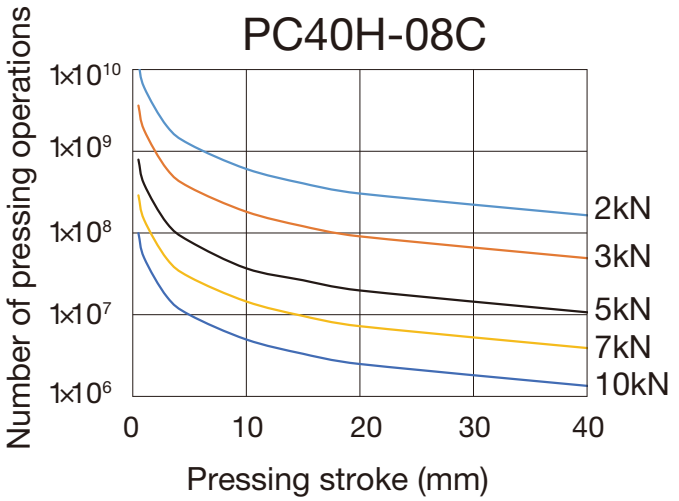

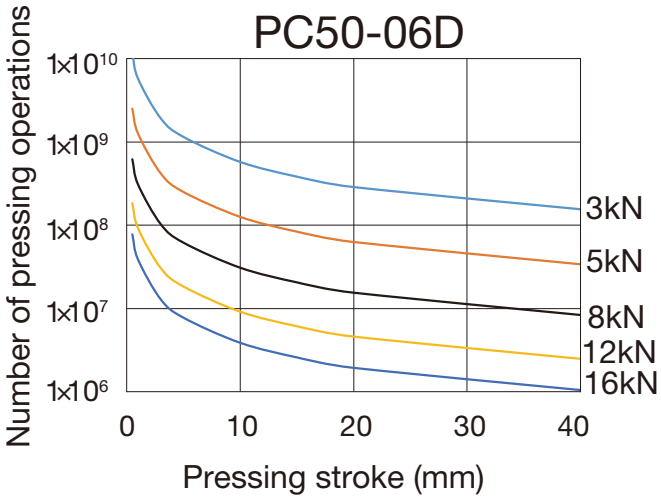

Running life will fluctuate depending on pressing load and pressing stroke.
The operating life is a theoretical value under the following conditions.

Mounting orientation: vertical (rod reaching lower end)
Pressing direction : compression direction
Payload : at maximum load capacity

* The graph does not guarantee the pressing stroke operation for pressing load.

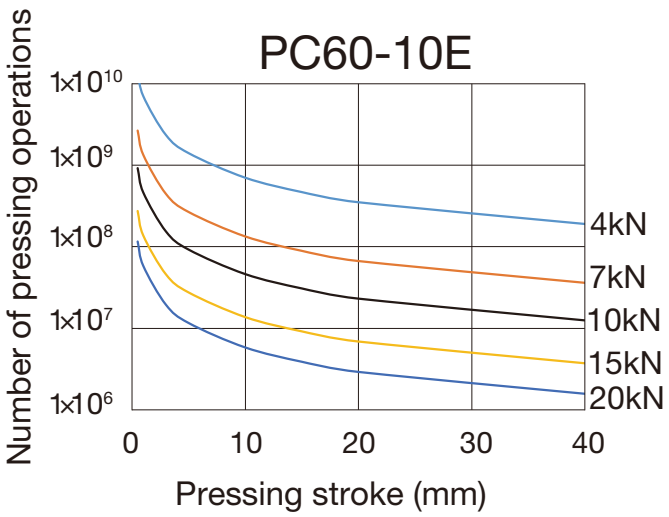

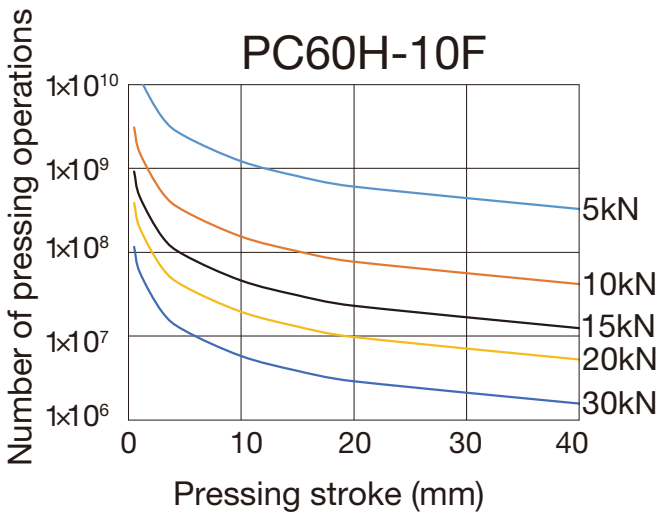

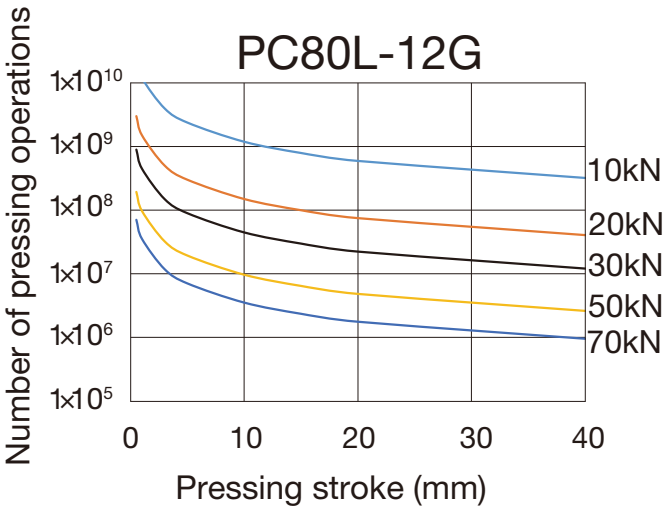

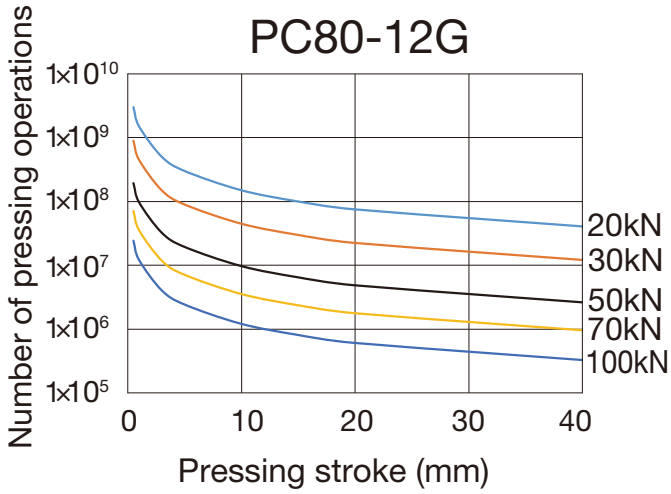

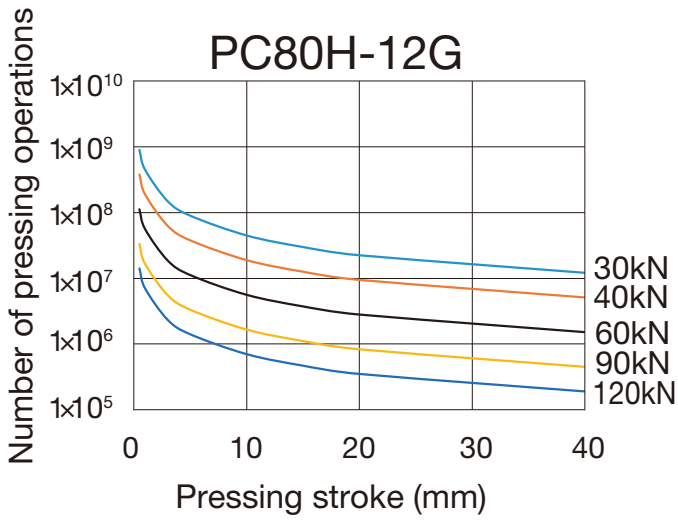

Running life will fluctuate depending on pressing load and pressing stroke.
The operating life is a theoretical value under the following conditions.

Mounting orientation	: Vertical (rod reaching lower end)
Pressing direction	: Compression direction
Payload	: at maximum load capacity

* The graph does not guarantee the pressing stroke operation for pressing load.

Maintenance

To maximize the performance of the actuator, periodic greasing is required.
THK cylinder-type actuators have a grease hole.

* For details of greasing procedures, refer to the Instruction Manual.

PCT

Standard grease: AFB-LF
To grease the ball screw portion, remove the plug and apply the grease directly to the ball screw shaft.

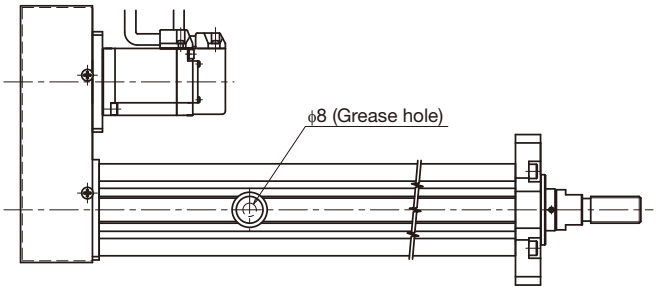

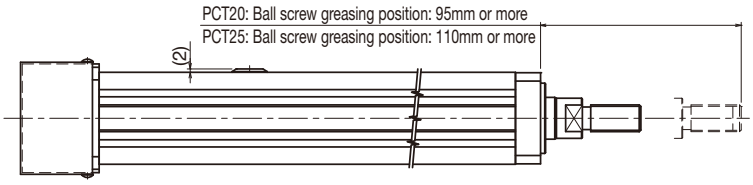

PC

Standard grease: L500
PC30 - 60H: To grease the ball screw portion, remove the plug and apply the grease directly to the ball screw shaft.

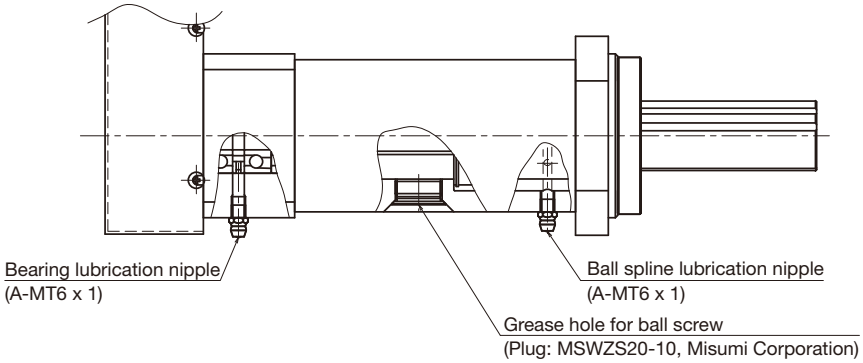

PC80L - 80H: To grease the ball screw portion, remove the plug and apply the grease via the ball screw grease hole.

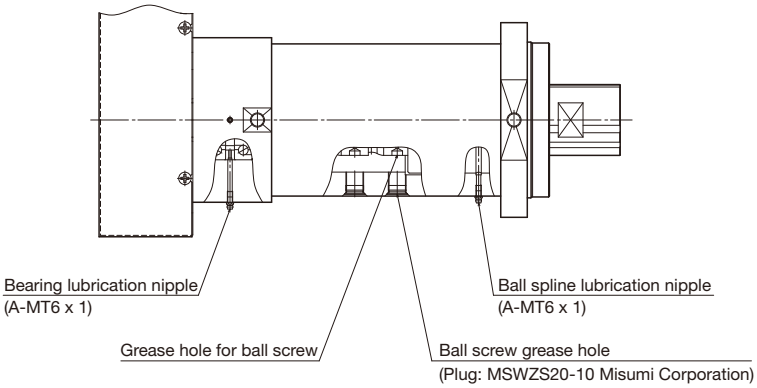

Low-capacity servo driver controller

TLC

For single axis / Position type

Features

Ready to use, simplified setup.

Simple Operation

Use PC setup tool D-STEP or digital operator TDO to access many useful functions.

Functions

- Selectable function modes
  (64-position, external unit input instruction, 256-position, 512-position, Solenoid mode 1, and Solenoid mode 2)
- Step data count: Up to 512 (depending on function mode)
- Alarm history: Up to 50 (including power ON history)
- Switching between Auto/Manual, brake release switch
- Selectable control methods (positioning or pressing)
- Auto-tuning functionality built-in

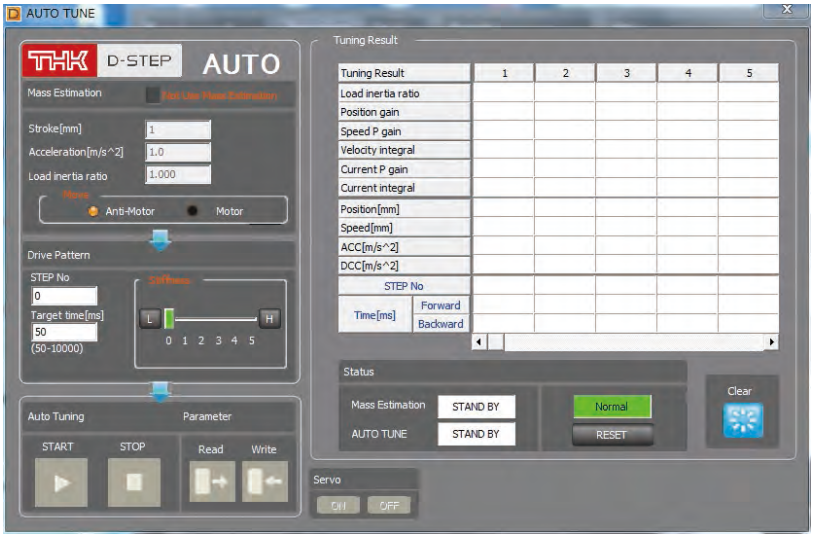

Combined Control Device Model Configuration (TLC)

Control device model	Capacity	Power supply voltage	Type	Encoder type	Actuator model	Lead	Home position	Brake	Stroke
TLC -	005 -	024DC -	MOD -	A -	PCT20 -	06N -	D -	B -	0050
(1)	(2)	(3)	(4)	(5)	(6)	(7)	(8)	(9)	(10)
TLC	005: 50W	024DC: 24VDC	MOD: Mode switching type	A: Absolute	Direct coupling PCT20 Motor wrap PCT20R	06N	D: Motor side R: Reverse motor side	No symbol: Without brake B: With brake	0050: 50mm 0100: 100mm 0150: 150mm 0200: 200mm

TLC Specifications

Type of machine	Model		TLC					
	Capacity		50W					
Input power supply	Main circuit		24VDC±10%					
	Control circuit							
	Power supply [A]		Rated 6A (Max 16A)					
Control	Control axis		Single axis					
	Motor		AC servo motor					
	Control		Feedback control (Semi-closed loop)					
	Position detection		Absolute					
	Acceleration/deceleration		Trapezoid acceleration, S-shape acceleration					
Program	Function mode		64-position	External unit input	256-position	512-position	Solenoid mode 1	Solenoid mode 2
	Step data count		64 points	64 points	256 points	512 points	7 points	3 points
	Data input/output		PC setup tool D-STEP or Digital operator TDO					
Input/output	Dedicated input/output	Input points	16 points (Start, Return to home position, Pause, Reset, Servo ON, Specify step number, etc.) *					
		Output points	16 points (Return to home position completed, In position, Servo ready, Alarm, Battery alarm, etc.) *					
	Input/output power supply		24VDC ±10% (This should be prepared by yourself.)					
Communication	Serial communication	Device	Digital operator or PC software					
		Method	RS–485					
		Ports	Mini DIN × 1					
Usage conditions	Operating/storage temperature		0 to 40°C (No freezing) / -20 to 85°C (No freezing)					
	Operating/storage humidity		90% RH or below (No condensation)					
	Ambient condition		Indoor (Free from direct sunlight, corrosive gas, flammable gas, oil mist, dust, water, oil and chemicals)					
General specifications	Protective function		Overload, overvoltage, excessive position deviation, software limit over error, etc.					
	Accessories		Power supply connector × 1 I/O connector × 1					
	Options (sold separately)		Digital operator TDO (Cable length 5m) I/O cable 3m, 5m, 7m, and 10m Communication cable (Mini DIN↔USB)					
	External dimensions [mm]		36.4mm (W)×199.2mm (H)×112.6mm (D)					
	Weight (not including battery)		0.4kg or less					

* This count varies depending on function mode.

System Configuration

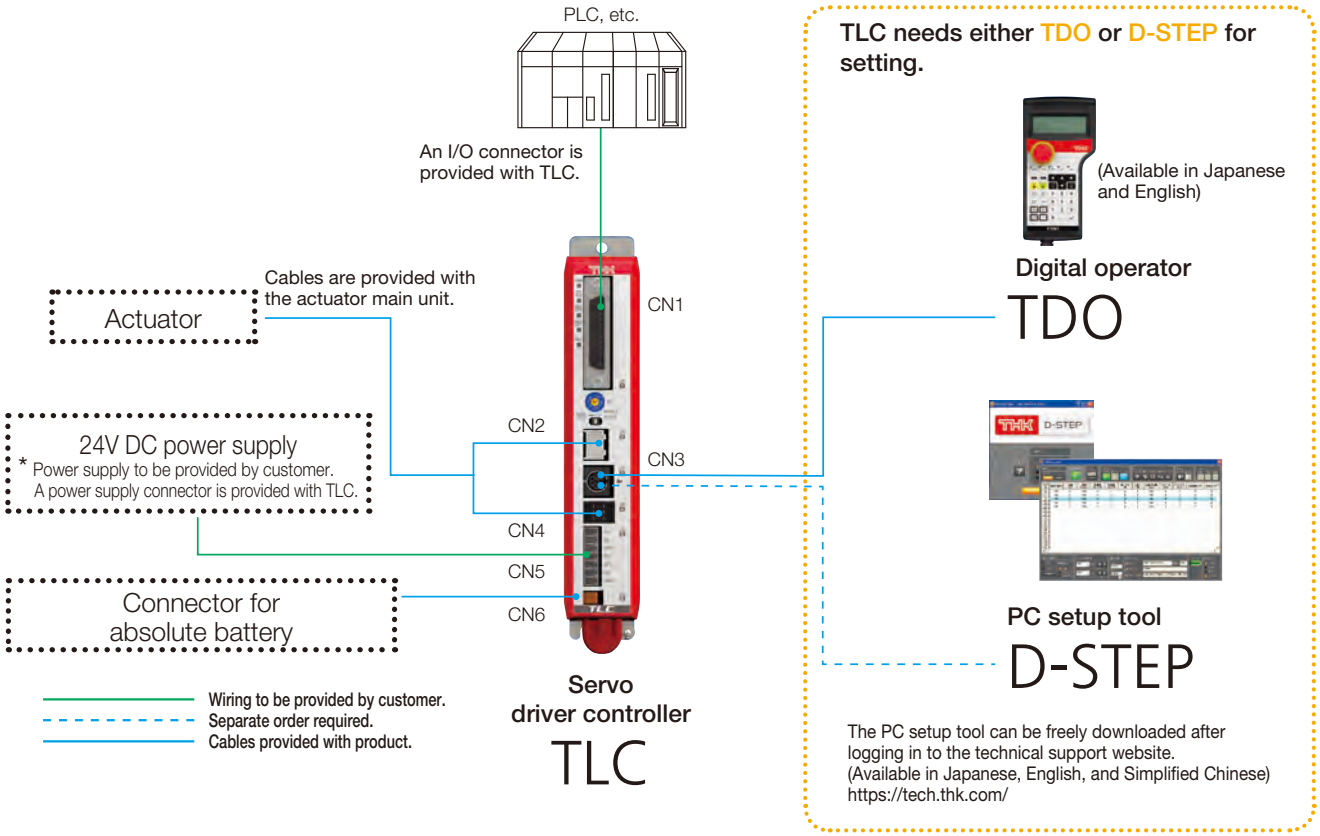

Dimensional Drawing of Controller

TLC

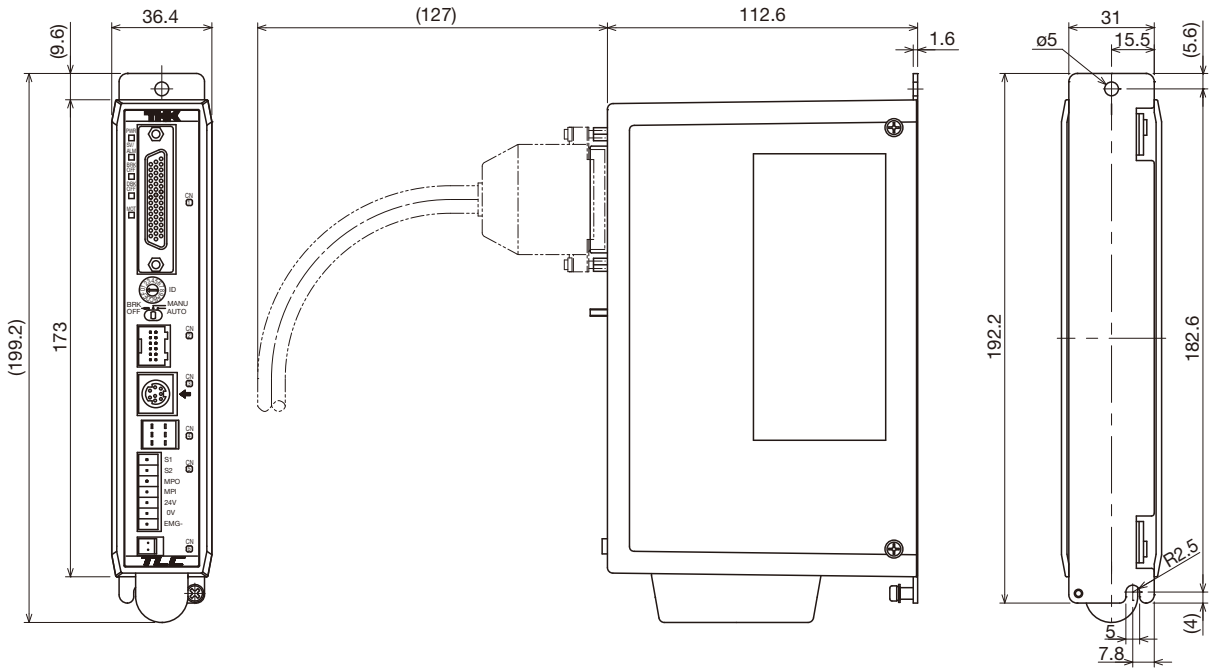

TLC Pin Assignment

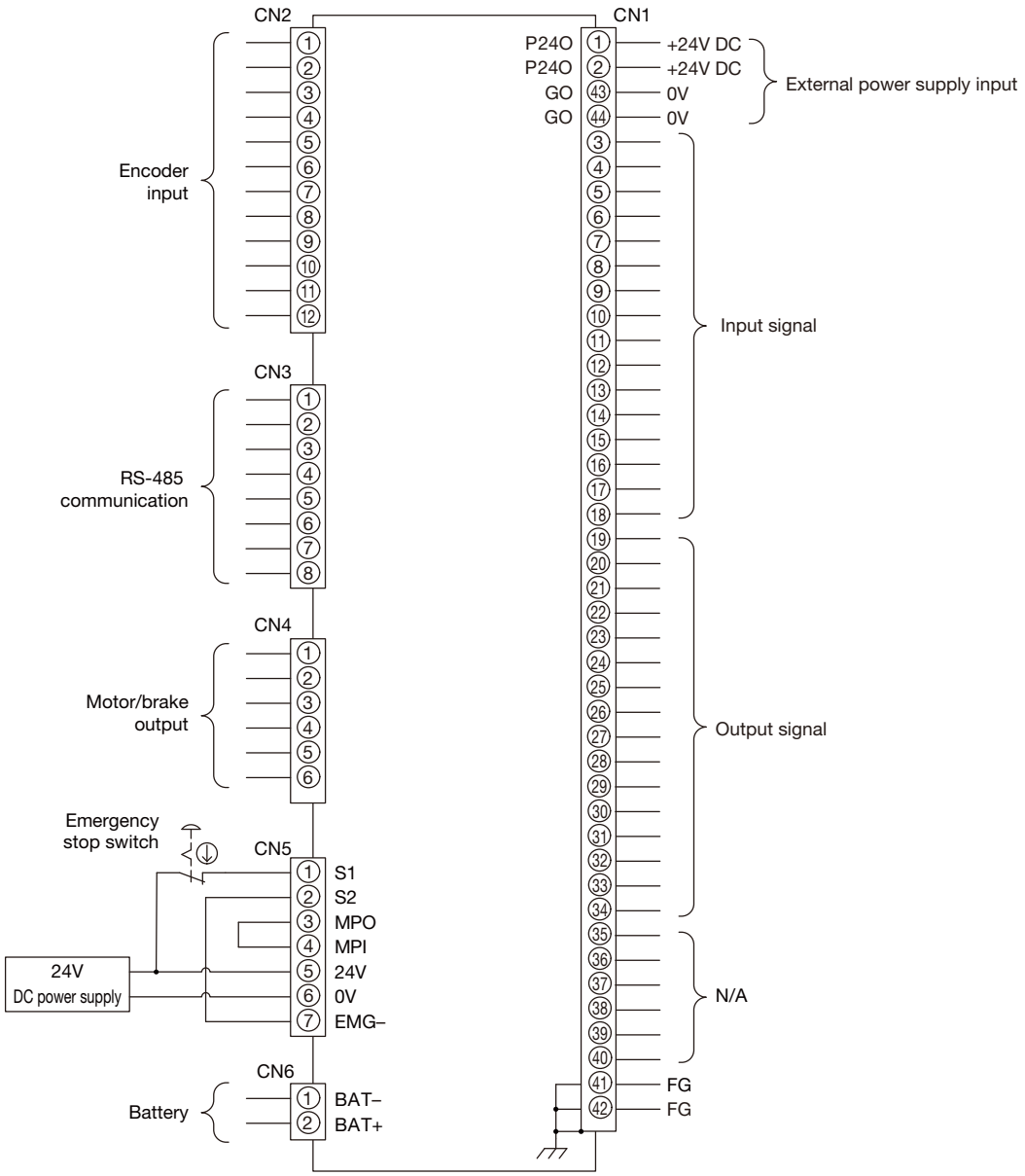

* For attached I/O connector pin numbers, see P.36.
* Customer provides 24V DC power supply for input/output circuitry.

Input/Output Circuitry for TLC (CN1)

Input circuit

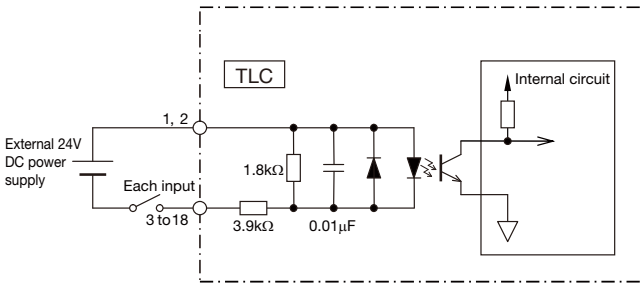

Output circuit

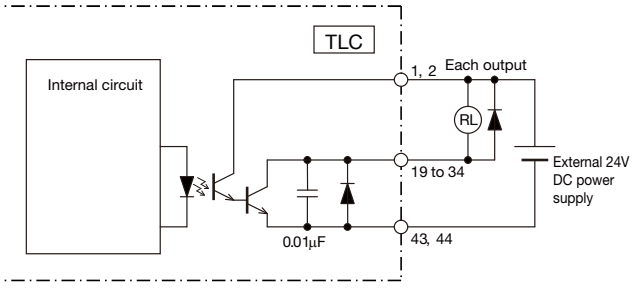

TLC Function Modes

TLC provides six modes to support various requirements and purposes.

Function mode		Overview	Step data count	Pressing operation
Multi-point positioning	0: 64-position	Multi-point positioning operation with 64 points With area output, with P area output	64	○
	1: External unit input instruction	Multi-point positioning operation with 64 points I/O-based external unit instruction mode Without area output, with P area output	64	–
	2: 256-position	Multi-point positioning operation with 256 points Without area output, with P area output	256	○
	3: 512-position	Multi-point positioning operation with 512 points Without area output, without P area output	512	○
Electromagnetic valve	4: Solenoid mode 1	Multi-point positioning operation with 7 points Direct move command input With area output, with P area output	7	○
	5: Solenoid mode 2	Multi-point positioning operation with 3 points Direct move command input With position sensor auto-switch output, area output and P area output	3	–

Pin Assignment by Function Mode

I/O	CN1 pin number	Signal name					
		Function mode 0	Function mode 1	Function mode 2	Function mode 3	Function mode 4	Function mode 5
		64-position	External unit input	256-position	512-position	Solenoid mode 1	Solenoid mode 2
Input	3	PI 0	PI 0	PI 0	PI 0	ST 0	ST 0
	4	PI 1	PI 1	PI 1	PI 1	ST 1	ST 1
	5	PI 2	PI 2	PI 2	PI 2	ST 2	ST 2
	6	PI 3	PI 3	PI 3	PI 3	ST 3	–
	7	PI 4	PI 4	PI 4	PI 4	ST 4	–
	8	PI 5	PI 5	PI 5	PI 5	ST 5	–
	9	–	MODE	PI 6	PI 6	ST 6	–
	10	–	JOG/INCHING	PI 7	PI 7	–	–
	11	–	JOG P	–	PI 8	–	–
	12	BKRL	JOG N	BKRL	BKRL	BKRL	BKRL
	13	STRT	STRT/PWRT	STRT	STRT	–	–
	14	MANU	MANU	MANU	MANU	MANU	MANU
	15	HOME	HOME	HOME	HOME	HOME	HOME
	16	PAUSE	PAUSE	PAUSE	PAUSE	PAUSE	PAUSE
	17	REST	REST	REST	REST	REST	REST
	18	SV-ON	SV-ON	SV-ON	SV-ON	SV-ON	SV-ON
Output	19	PO 0	PO 0	PO 0	PO 0	PE 0	LS 0
	20	PO 1	PO 1	PO 1	PO 1	PE 1	LS 1
	21	PO 2	PO 2	PO 2	PO 2	PE 2	LS 2
	22	PO 3	PO 3	PO 3	PO 3	PE 3	–
	23	PO 4	PO 4	PO 4	PO 4	PE 4	–
	24	PO 5	PO 5	PO 5	PO 5	PE 5	–
	25	MOVE	MOVE	PO 6	PO 6	PE 6	–
	26	AREA	MODES	PO 7	PO 7	AREA	AREA
	27	P AREA	P AREA	P AREA	PO 8	P AREA	P AREA
	28	MANU S	MANU S	MANU S	MANU S	MANU S	MANU S
	29	HEND	HEND	HEND	HEND	HEND	HEND
	30	INPS	INPS	INPS	INPS	INPS	–
	31	LOAD/TRQS	WEND	LOAD/TRQS	LOAD/TRQS	LOAD/TRQS	–
	32	SVRDY	SVRDY	SVRDY	SVRDY	SVRDY	SVRDY
	33	BALM	BALM	BALM	BALM	BALM	BALM
	34	ALM	ALM	ALM	ALM	ALM	ALM

Input Signal Functions

Input		
Signal name	Description	Remarks
MANU	Operation mode	Switches AUTO/MANUAL from I/O. MANUAL when signal is on, and AUTO when it is off.
STRT	Start	Start signal of program step. Program starts when signal is on.
PI0 to PI8	Instruction position number	Input for specifying position numbers. Specifies programs at each signal level. Selects a program step and starts a program with "STRT" signal.
PAUSE	Pause	Temporarily interrupts the operation. PAUSE input status when signal is off. (N.C. connection specification)
HOME	Return to home position	Starts the return to home position operation. Returning to home position is started when signal is on. It stops when it is off.
SV-ON	Servo on	Turns the servo ON and OFF. Servo ON when signal is on, and servo OFF when signal is off.
REST	Alarm reset	Resets alarm. Resets remaining travel distance during pause. Resets when it is on.
BKRL	Brake release	Forcibly releases brake. Releases brake when it is on.
MODE	External unit input instruction mode	Enters the instruction mode when signal is on. Instruction mode when signal is on.
PWRT	Current position write with external unit input instruction	During the instruction mode, the position is written when this signal is greater than 20ms with the position for writing specified.
JOG/INCHING	Manual operation switch with external unit input instruction	Switching of manual operation during the instruction mode. Selects inching operation when it is on, and jog operation when it is off.
JOG P	Moving direction + with external unit input instruction	Operating direction and operation start signal during the instruction mode. Moves in + direction to the soft limit when signal is on. Decelerates and stops when it is off while moving.
JOG N	Moving direction - with external unit input instruction	Operating direction and operation start signal during the instruction mode. Moves in - direction to the soft limit when signal is on. Decelerates and stops when it is off while moving.
ST0 to 6	Cylinder type START	Program start signal for position numbers from ST0 to ST6. Can select either Level or Edge for signal using parameter 13 "move" command. Note that when more than two positions are on at the same time, the lowest-number signal takes precedence.

Output Signal Functions

Output		
Signal name	Description	Remarks
MANU S	Operation mode status	Operation mode status outputs (AUTO/MANUAL). MANUAL when signal is on, AUTO when off.
PO0 to PO8	End position number	Outputs the position number arrived after positioning is completed (binary outputs).
MOVE	Moving	Outputs signal during motor operation.
INPS	Positioning completed	Outputs when motor comes within the positioning completed width.
SVRDY	Operation preparations completed	Outputs signal when servo is on.
ALM	Alarm	Alarm output signal.
MODES	External unit input instruction mode status	Output signal for judging instruction mode or regular operation mode. Instruction mode when signal is on. Regular operation mode when it is off.
WEND	Writing completed	Signal is off after switching to the regular mode, and it is on for 30ms when writing of the PWRT signal is completed.
HEND	Return to home position completed	Outputs signal when returning to home position is completed.
AREA	Upper/lower area limit	On when the current position of actuator is within a range specified by the parameter.
P AREA	Position area	On when the current position of actuator is within a range specified by the program step.
BALM	Voltage reduction in battery	Off when the battery voltage decreases.
LOAD	Load output judgment status	On when a directive torque exceeds the threshold over a certain period within a judgment range.
TRQS	Torque level status	On when the load threshold is reached while moving. Off while the load remains under the threshold.
PE0 to PE6	Cylinder type arrival completed output	Signal generated after operation for positioning is completed.
LS0 to LS2	Cylinder type position detection output	Outputs when the current position comes within the positioning width for each of the three points.

I/O Connector Pin Numbers

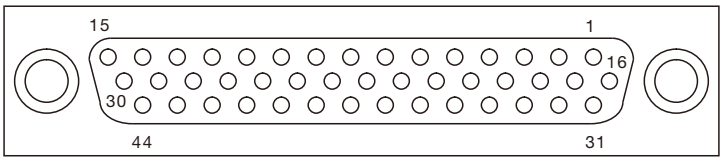

* Controller connector port view

Actuator Cable

Motor brake cable for TLC: CBL-TLC-ACP-∗∗ F (Standard)
CBL-TLC-ACP-∗∗ R (High flex)
∗∗ indicates cable length: 03 (3m), 05 (5m), or 10 (10m)

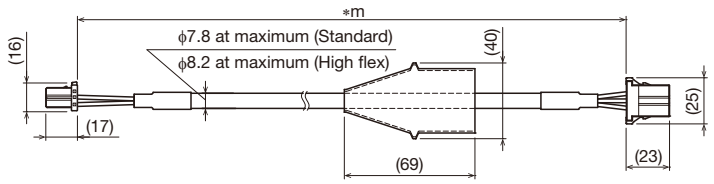

Encoder cable for TLC: CBL-TLC-ACS-∗∗ F (Standard)
CBL-TLC-ACS-∗∗ R (High flex)
∗∗ indicates cable length: 03 (3m), 05 (5m), or 10 (10m)

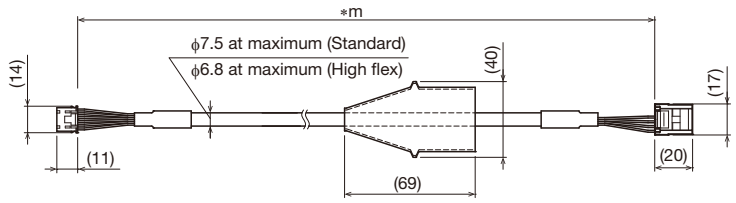

Motor brake extension cable for TLC/THC: CBL-ACP-EXT01-∗∗ F (Standard)
CBL-ACP-EXT01-∗∗ R (High flex)
∗∗ indicates cable length: 01 (1m), 03 (3m), or 05 (5m)

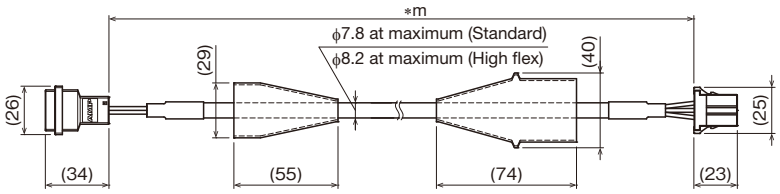

Extension encoder cable for TLC: CBL-ACS-EXT01-∗∗ F (Standard)
CBL-ACS-EXT01-∗∗ R (High flex)
∗∗ indicates cable length: 01 (1m), 03 (3m), or 05 (5m)

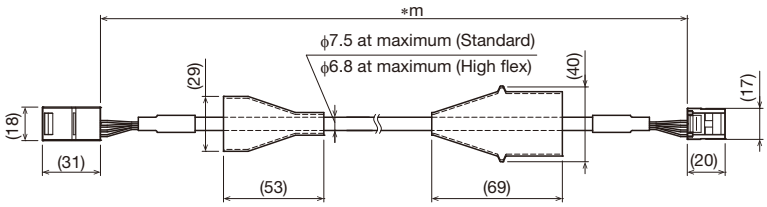

Note 1) For use involving moving elements, select high flex type. The recommended bending radius at the core of cable is R95 or greater.
(For use involving other than moving elements, R50 or greater is recommended.)
Note 2) When using the TLC servo driver controller, motor brake cable and encoder cable should be no longer than 11m.
Up to two extension cables can be connected.

Option

Lithium ion battery (for maintenance)

ER6V C4 (Toshiba Home Appliances Corporation)

- This is required for the absolute system.
- When replacing the battery, order the above.

High-capacity servo driver controller

THC

For single axis / Position type

Features

Ready to use, simplified setup.

Simple Operation

Use PC setup tool D-STEP or digital operator TDO to access many useful functions.

Functions

- Selectable function modes
  (64-position, external unit input instruction, 256-position, 512-position, Solenoid mode 1, and Solenoid mode 2)
- Step data count: Up to 512 (depending on function mode)
- Alarm history: Up to 50 (including power ON history)
- Switching between Auto/Manual, brake release switch
- Selectable control methods (positioning or pressing)
- Auto-tuning functionality built-in

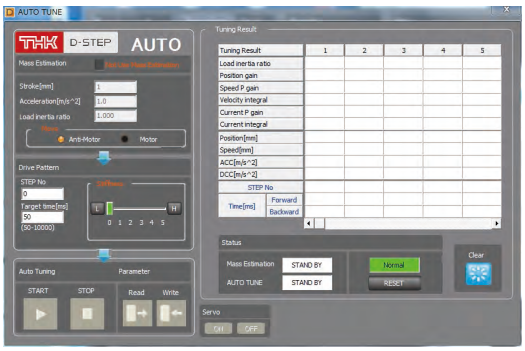

Combined Control Device Model Configuration (THC)

Control device model	Capacity	Power supply voltage	Type	Encoder type	Actuator model	Lead	Home position	Brake	Stroke
THC	010	100AC	MOD	A	PCT25	04N	D	B	0050
(1)	(2)	(3)	(4)	(5)	(6)	(7)	(8)	(9)	(10)
THC	010: 100W 020: 200W 040: 400W 075: 750W	100AC: 100VAC 200AC: 200VAC	MOD: Mode switching type	A: Absolute	Direct coupling PCT25 Motor wrap PCT25R PC30 PC40	04N 06N 06A 06B	D: Motor side R: Reverse motor side	No symbol: Without brake B: With brake	Enter the stroke of the actuator model (6) Example) 0050: 50mm

THC Specifications

Type of machine	Model		THC						
	Capacity		100V AC			200V AC			
			100W	200W	400W	100W	200W	400W	750W
Input power supply	Main circuit		100V AC single-phase, 50/60Hz (Permissible voltage: 90 to 120V)			200V AC single-phase, 50/60Hz (Permissible voltage: 170 to 250V)			
	Control circuit		100V AC single-phase, 50/60Hz (Permissible voltage: 90 to 120V)			200V AC single-phase, 50/60Hz (Permissible voltage: 170 to 250V)			
	Power supply [kVA]		0.5	0.9	1.3	0.5	0.9	1.6	2.4
Control	Control axis		Single axis						
	Motor		AC servo motor						
	Control		Feedback control (Semi-closed loop)						
	Position detection		Absolute						
	Acceleration/deceleration		Trapezoid acceleration, S-shape acceleration						
Program	Function mode		64-position	External unit input	256-position	512-position	Solenoid mode 1	Solenoid mode 2	
	Step data count		64 points	64 points	256 points	512 points	7 points	3 points	
	Data input/output		PC setup tool D-STEP or Digital operator TDO						
Input/output	Dedicated input/output	Input points	16 points (Start, Return to home position, Pause, Reset, Servo ON, Specify step number, etc.) *						
		Output points	16 points (Return to home position completed, In position, Servo ready, Alarm, Battery alarm, etc.) *						
	Input/output power supply		24VDC ±10% (This should be prepared by yourself.)						
Communication	Serial communication	Device	Digital operator or PC software						
		Method	RS–485						
		Ports	Mini DIN × 1						
Usage conditions	Operating/storage temperature		0 to 40°C (No freezing)/-20 to 85°C (No freezing)						
	Operating/storage humidity		90% RH or below (No condensation)						
	Ambient condition		Indoor (Free from direct sunlight, corrosive gas, flammable gas, oil mist, dust, water, oil and chemicals)						
Applicable standards	CE Marking		Low voltage directive: EN61800-5-1, EMC directive: EN61800-3						
General specifications	Protective function		Overload, overvoltage, excessive position deviation, software limit over error, etc.						
	Accessories		Power supply connector × 1 I/O connector × 1						
	Options (sold separately)		Digital operator TDO (Cable length 5m) I/O cable 3m, 5m, 7m, and 10m Communication cable (Mini DIN↔USB)						
	External dimensions [mm]		200W or lower: 58mm (W) × 208.6mm (H) × 120mm (D) 400W or higher: 67.5mm (W) × 208.6mm (H) × 120mm (D)						
	Weight (not including battery)		1.3kg or less	1.3kg or less	1.3kg or less	1.3kg or less	1.3kg or less	1.3kg or less	1.5kg or less

* This count varies depending on function mode.

System Configuration

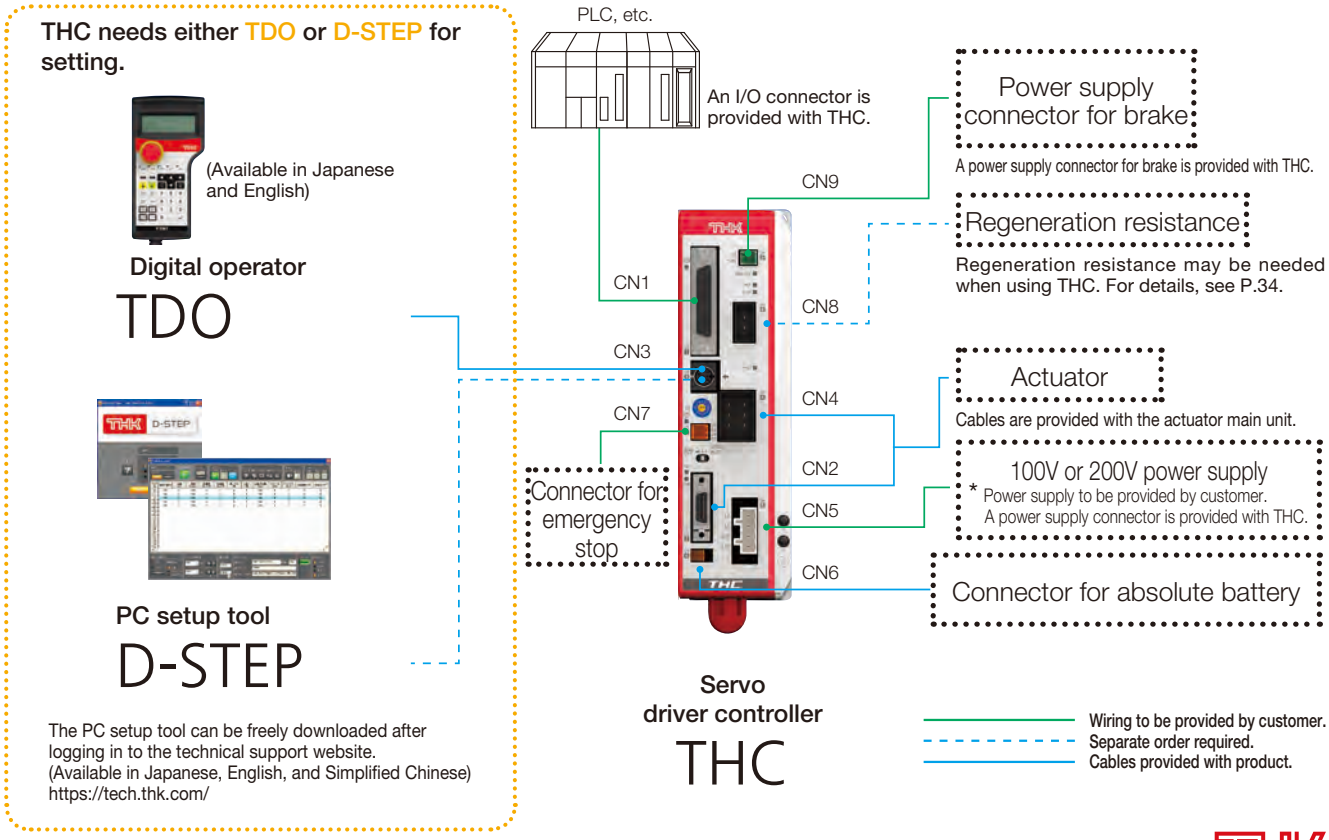

Controller

THC (100–200W)

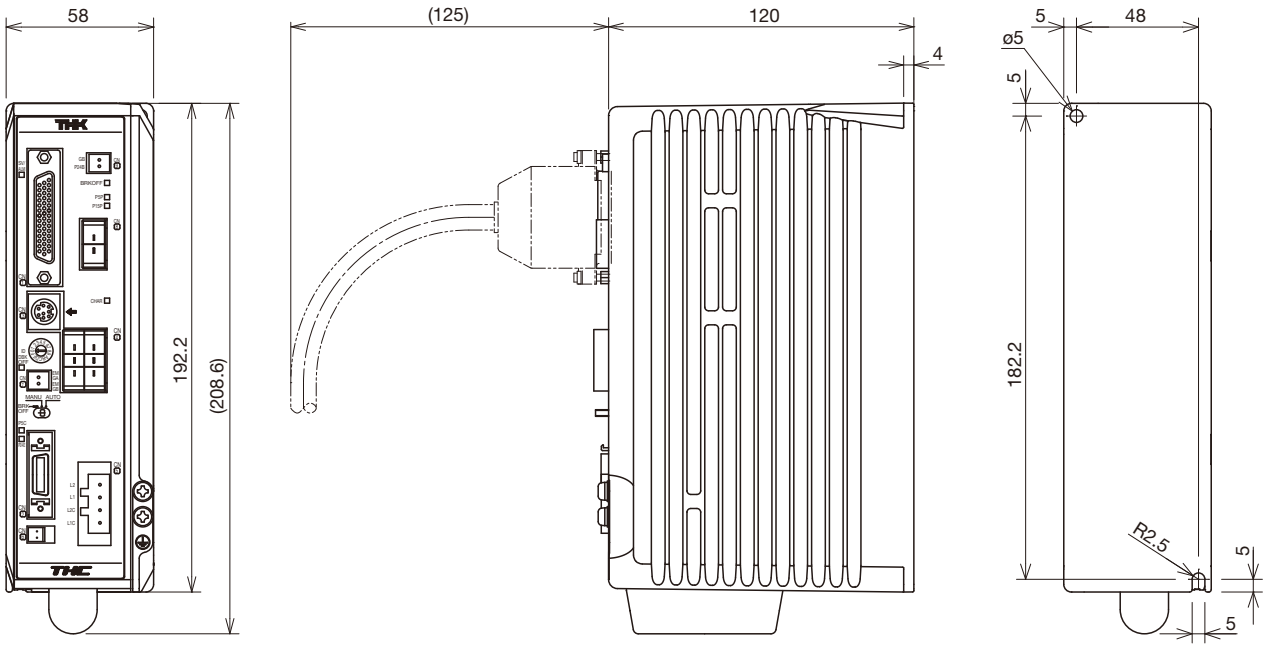

THC (400W & 750W)

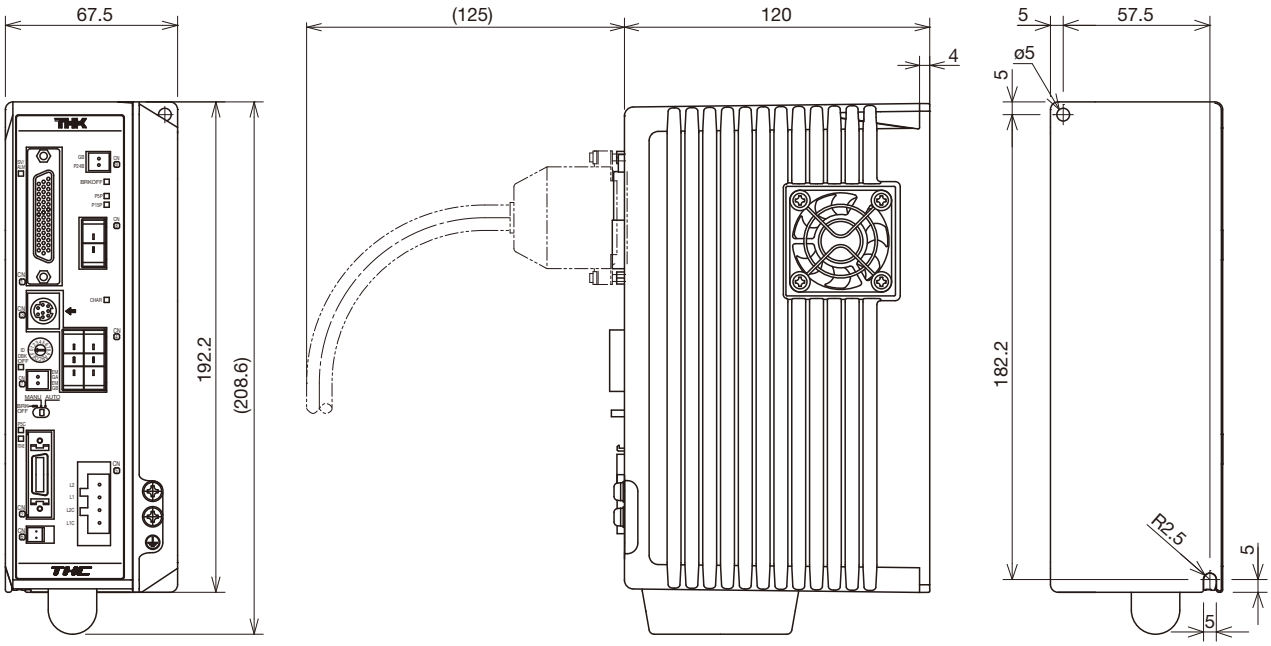

THC Pin Assignment

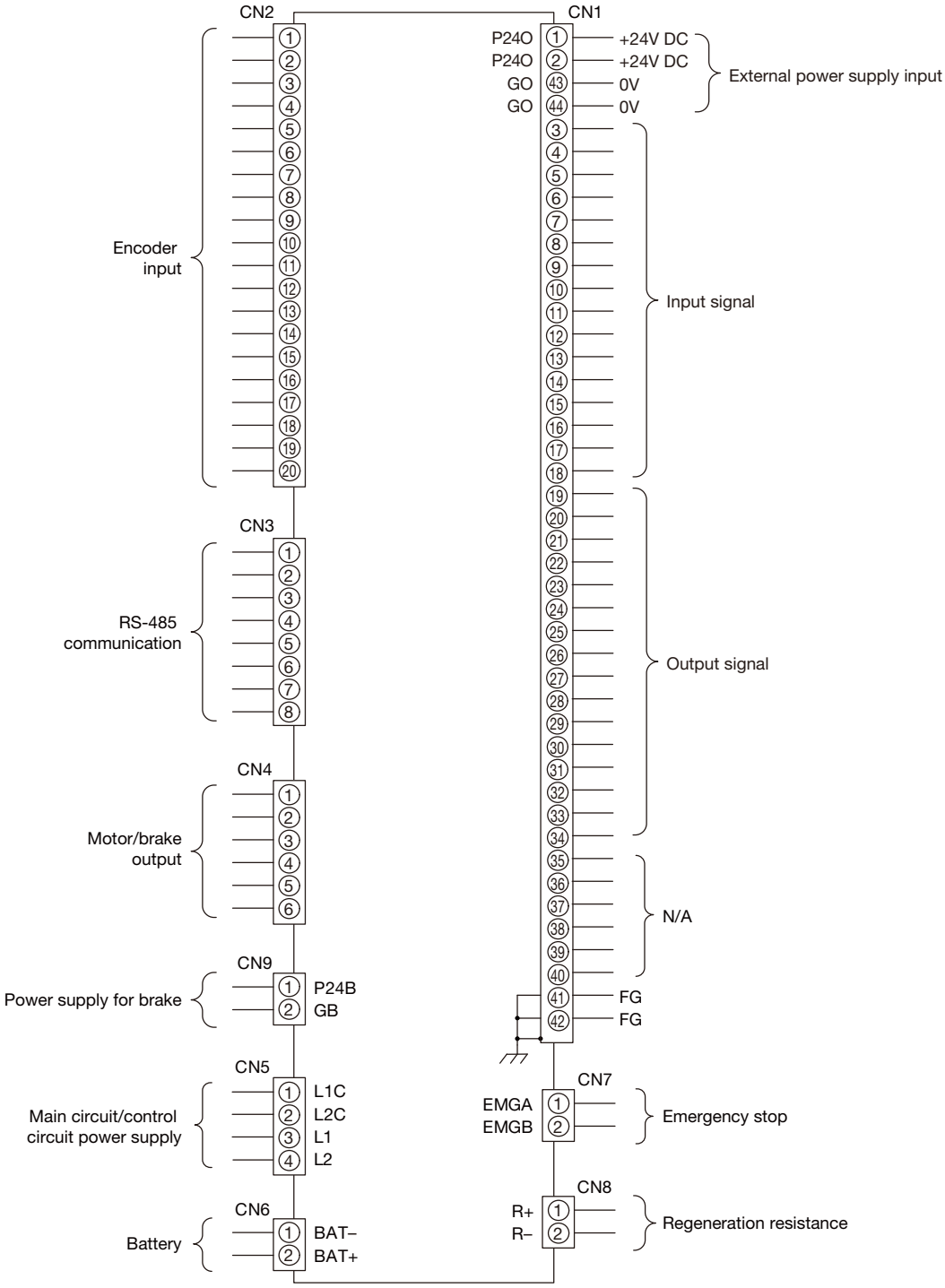

* For attached I/O connector pin numbers, see P.44.
* Customer provides 24V DC power supply for input/output circuitry.

Input/Output Circuitry for THC (CN1)

Input circuit

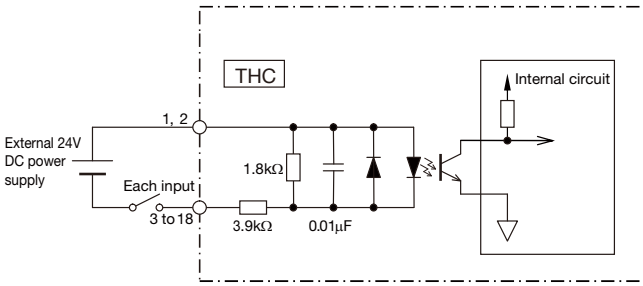

Output circuit

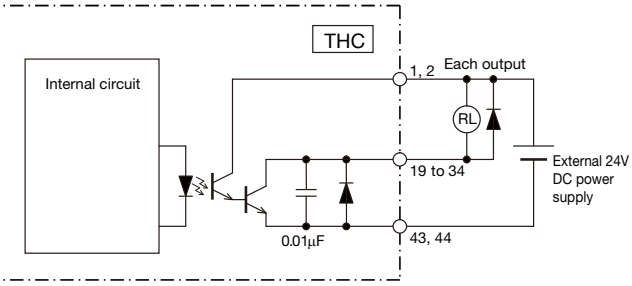

THC Function Modes

THC provides six modes to support various requirements and purposes.

Function mode		Overview	Step data count	Pressing operation
Multi-point positioning	0: 64-position	Multi-point positioning operation with 64 points With area output, with P area output	64	○
	1: External unit input instruction	Multi-point positioning operation with 64 points I/O-based external unit instruction mode Without area output, with P area output	64	–
	2: 256-position	Multi-point positioning operation with 256 points Without area output, with P area output	256	○
	3: 512-position	Multi-point positioning operation with 512 points Without area output, without P area output	512	○
Electromagnetic valve	4: Solenoid mode 1	Multi-point positioning operation with 7 points Direct move command input With area output, with P area output	7	○
	5: Solenoid mode 2	Multi-point positioning operation with 3 points Direct move command input With position sensor auto-switch output, area output and P area output	3	–

Pin Assignment by Function Mode

I/O	CN1 pin number	Signal name					
		Function mode 0	Function mode 1	Function mode 2	Function mode 3	Function mode 4	Function mode 5
		64-position	External unit input	256-position	512-position	Solenoid mode 1	Solenoid mode 2
Input	3	PI 0	PI 0	PI 0	PI 0	ST 0	ST 0
	4	PI 1	PI 1	PI 1	PI 1	ST 1	ST 1
	5	PI 2	PI 2	PI 2	PI 2	ST 2	ST 2
	6	PI 3	PI 3	PI 3	PI 3	ST 3	–
	7	PI 4	PI 4	PI 4	PI 4	ST 4	–
	8	PI 5	PI 5	PI 5	PI 5	ST 5	–
	9	–	MODE	PI 6	PI 6	ST 6	–
	10	–	JOG/INCHING	PI 7	PI 7	–	–
	11	–	JOG P	–	PI 8	–	–
	12	BKRL	JOG N	BKRL	BKRL	BKRL	BKRL
	13	STRT	STRT/PWRT	STRT	STRT	–	–
	14	MANU	MANU	MANU	MANU	MANU	MANU
	15	HOME	HOME	HOME	HOME	HOME	HOME
	16	PAUSE	PAUSE	PAUSE	PAUSE	PAUSE	PAUSE
	17	REST	REST	REST	REST	REST	REST
	18	SV-ON	SV-ON	SV-ON	SV-ON	SV-ON	SV-ON
Output	19	PO 0	PO 0	PO 0	PO 0	PE 0	LS 0
	20	PO 1	PO 1	PO 1	PO 1	PE 1	LS 1
	21	PO 2	PO 2	PO 2	PO 2	PE 2	LS 2
	22	PO 3	PO 3	PO 3	PO 3	PE 3	–
	23	PO 4	PO 4	PO 4	PO 4	PE 4	–
	24	PO 5	PO 5	PO 5	PO 5	PE 5	–
	25	MOVE	MOVE	PO 6	PO 6	PE 6	–
	26	AREA	MODES	PO 7	PO 7	AREA	AREA
	27	P AREA	P AREA	P AREA	PO 8	P AREA	P AREA
	28	MANU S	MANU S	MANU S	MANU S	MANU S	MANU S
	29	HEND	HEND	HEND	HEND	HEND	HEND
	30	INPS	INPS	INPS	INPS	INPS	–
	31	LOAD/TRQS	WEND	LOAD/TRQS	LOAD/TRQS	LOAD/TRQS	–
	32	SVRDY	SVRDY	SVRDY	SVRDY	SVRDY	SVRDY
	33	BALM	BALM	BALM	BALM	BALM	BALM
	34	ALM	ALM	ALM	ALM	ALM	ALM

Input Signal Functions

Input		
Signal name	Description	Remarks
MANU	Operation mode	Switches AUTO/MANUAL from I/O. MANUAL when signal is on, and AUTO when it is off.
STRT	Start	Start signal of program step. Program starts when signal is on.
PI0 - PI8	Instruction position number	Input for specifying position numbers. Specifies programs at each signal level. Selects a program step and starts a program with "STRT" signal.
PAUSE	Pause	Temporarily interrupts the operation. PAUSE input status when signal is off. (N.C. connection specification)
HOME	Return to home position	Starts the return to home position operation. Returning to home position is started when signal is on. It stops when it is off.
SV-ON	Servo on	Turns the servo ON and OFF. Servo ON when signal is on, and servo OFF when signal is off.
REST	Alarm reset	Resets alarm. Resets remaining travel distance during pause. Resets when it is on.
BKRL	Brake release	Forcibly releases brake. Releases brake when it is on.
MODE	External unit input instruction mode	Enters the instruction mode when signal is on. Instruction mode when signal is on.
PWRT	Current position write with external unit input instruction	During the instruction mode, the position is written when this signal is greater than 20ms with the position for writing specified.
JOG/INCHING	Manual operation switch with external unit input instruction	Switching of manual operation during the instruction mode. Selects inching operation when it is on, and jog operation when it is off.
JOG P	Moving direction + with external unit input instruction	Operating direction and operation start signal during the instruction mode. Moves in + direction to the soft limit when signal is on. Decelerates and stops when it is off while moving.
JOG N	Moving direction - with external unit input instruction	Operating direction and operation start signal during the instruction mode. Moves in - direction to the soft limit when signal is on. Decelerates and stops when it is off while moving.
ST0 - 6	Cylinder type START	Program start signal for position numbers from ST0 to ST6. Can select either Level or Edge for signal using parameter 13 "move" command. Note that when more than two positions are on at the same time, the lowest-number signal takes precedence.

Output Signal Functions

Output		
Signal name	Description	Remarks
MANU S	Operation mode status	Operation mode status outputs (AUTO/MANUAL). MANUAL when signal is on, AUTO when off.
PO0 - PO8	End position number	Outputs the position number arrived after positioning is completed (binary outputs).
MOVE	Moving	Outputs signal during motor operation.
INPS	Positioning completed	Outputs when motor comes within the positioning completed width.
SVRDY	Operation preparations completed	Outputs signal when servo is on.
ALM	Alarm	Alarm output signal.
MODES	External unit input instruction mode status	Output signal for judging instruction mode or regular operation mode. Instruction mode when signal is on. Regular operation mode when it is off.
WEND	Writing completed	Signal is off after switching to the regular mode, and it is on for 30ms when writing of the PWRT signal is completed.
HEND	Return to home position completed	Outputs signal when returning to home position is completed.
AREA	Upper/lower area limit	On when the current position of actuator is within a range specified by the parameter.
P AREA	Position area	On when the current position of actuator is within a range specified by the program step.
BALM	Voltage reduction in battery	Off when the battery voltage decreases.
LOAD	Load output judgment status	On when a directive torque exceeds the threshold over a certain period within a judgment range.
TRQS	Torque level status	On when the load threshold is reached while moving. Off while the load remains under the threshold.
PE0 - PE6	Cylinder type arrival completed output	Signal generated after operation for positioning is completed.
LS0 - LS2	Cylinder type position detection output	Outputs when the current position comes within the positioning width for each of the three points.

I/O Connector Pin Numbers

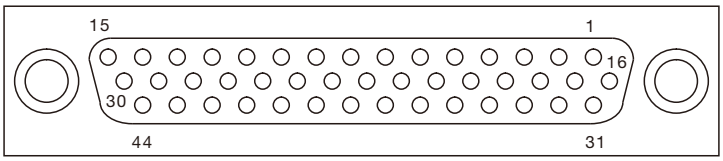

* Controller connector port view

Actuator Cable

Motor brake cable for THC: CBL-THC-ACP-∗∗ F (Standard)
CBL-THC-ACP-∗∗ R (High flex)
∗∗ indicates cable length: 03 (3m), 05 (5m), or 10 (10m)

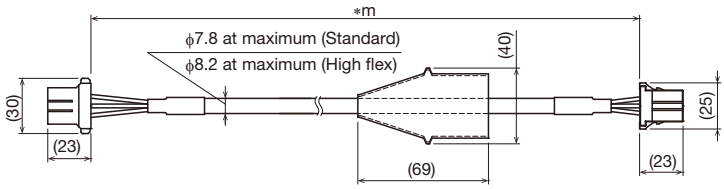

Encoder sensor cable for THC: CBL-THC-ACS-∗∗ F (Standard)
CBL-THC-ACS-∗∗ R (High flex)
∗∗ indicates cable length: 03 (3m), 05 (5m), or 10 (10m)

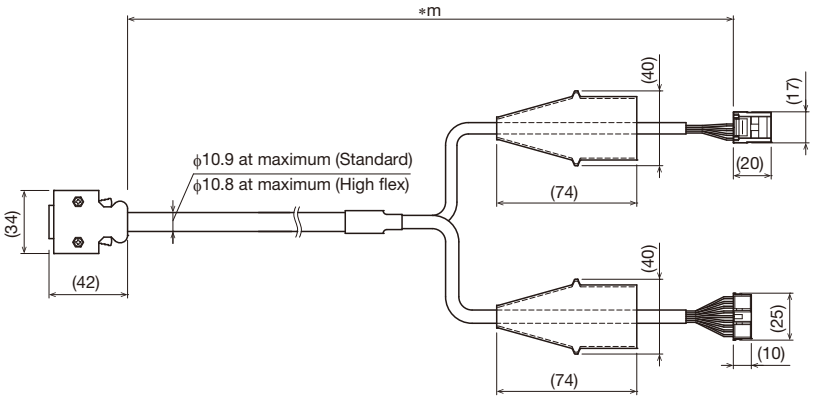

Motor brake extension cable for TLC/THC: CBL-ACP-EXT01-∗∗ F (Standard)
CBL-ACP-EXT01-∗∗ R (High flex)
∗∗ indicates cable length: 01 (1m), 03 (3m), or 05 (5m)

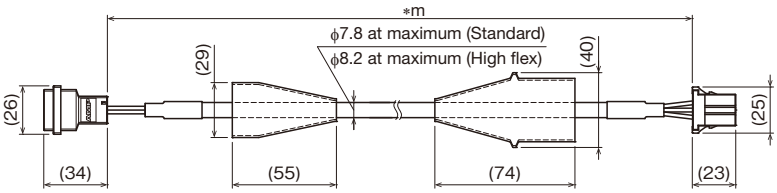

Encoder sensor extension cable for THC: CBL-ACS-EXT02-∗∗F (Standard)
CBL-ACS-EXT02-∗∗R (High flex)
∗∗ indicates cable length: 01 (1m), 03 (3m), or 05 (5m).

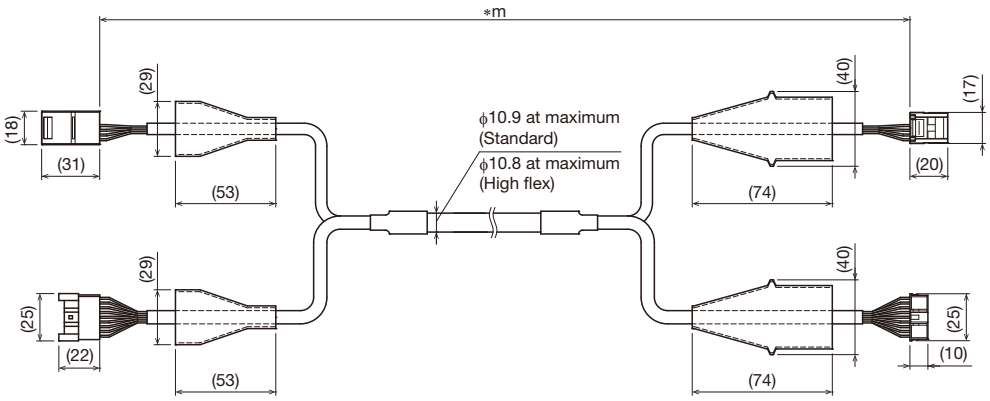

Note 1) For use involving moving elements, select high flex type. The recommended bending radius at the core of cable is R95 or greater.
(For use involving other than moving elements, R50 or greater is recommended.)
Note 2) When using the TLC servo driver controller, motor brake cable and encoder sensor cable should be no longer than 11m.
Up to two extension cables can be connected.
Note 3) When using the THC servo driver controller, the lengths of motor brake cable and encoder sensor cable should be no longer than 16m.
Up to two extension cables can be connected.

Option

Lithium ion battery (for maintenance)

ER6V C4 (Toshiba Home Appliances Corporation)

- This is required for the absolute system.
- When replacing the battery, order the above.

Optional (Regeneration Resistance)

Regeneration resistance

To make electrical actuator operate via the THC controller series, a regeneration resistance may be necessary depending on the operating conditions. The following table lists the required number of regeneration resistances just for reference. The customer should provide the required number of them.
It is recommended that you use regeneration resistances manufactured by Iwaki Musen Kenkyusho Co.,LTD.
THK supplies regeneration resistance connection cables. The customer can order them separately as necessary.

■ Regeneration resistance (Power-type cement resistor)

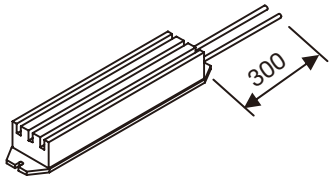

	Name of item	Manufacturer
A	RH150 100Ω J	Iwaki Musen Kenkyusho Co.,LTD.
B	RH150 50Ω J	

THC capacity	Orientation	
	Horizontal mount	Vertical mount
100W	A x 1	A x 1
200W	A x 1	A x 1
400W	B x 2	B x 2
750W	B x 2	B x 2

■ Regeneration resistance connection cable (CBL-REG00-01F)

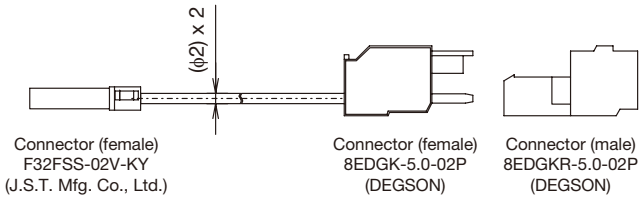

* Cable insertion jig (DG010-01P-19-00AH) is provided.
(The customer does not have to provide special tools)

	Model	Length	Manufacturer
1	CBL-REG00-01F	1m	THK Co., Ltd.

Configuration Diagram

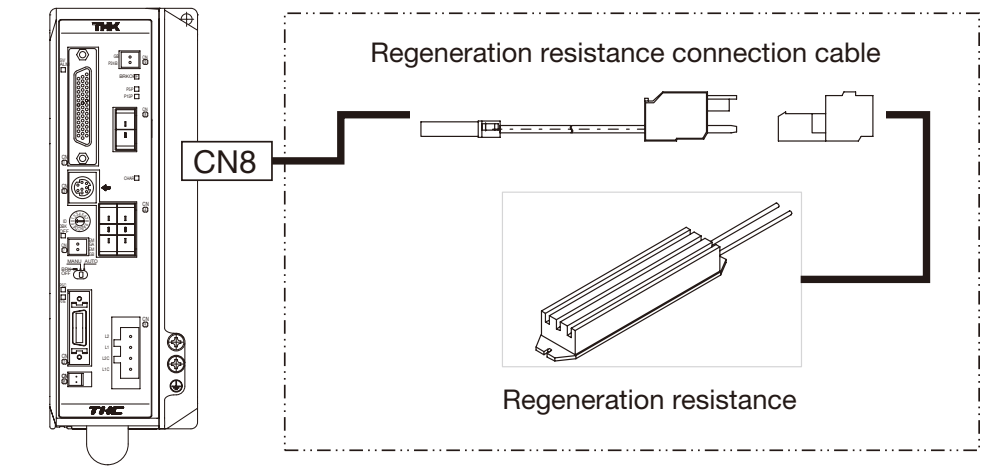

* There is no polarity in wiring.

Regeneration Resistance External Drawing

RH150 (90W, 100Ω) (90W, 50Ω) common to all

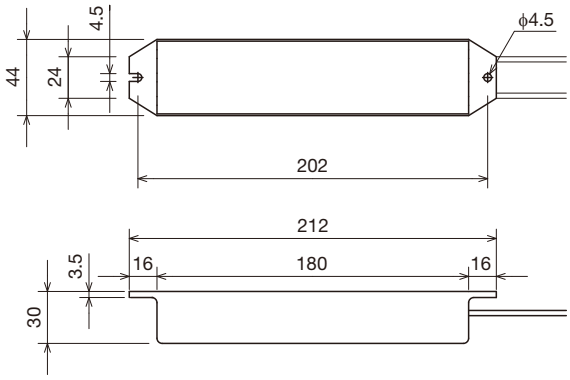

Wiring Example (Using Two Regeneration Resistances)

When you use two regeneration resistances, connect them in series.

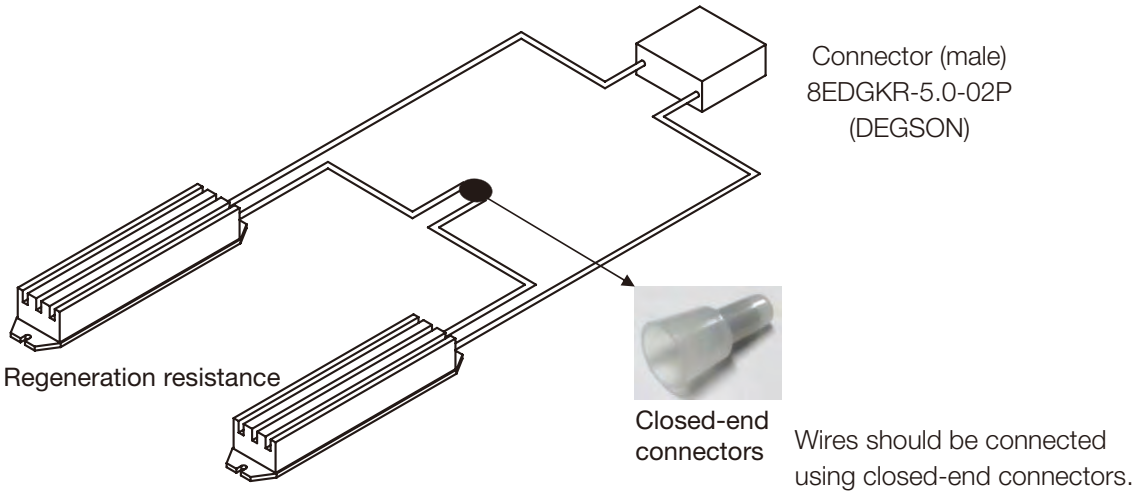

Precautions on Selecting Resistance

The customer should provide the required number of regeneration resistances for each THC.

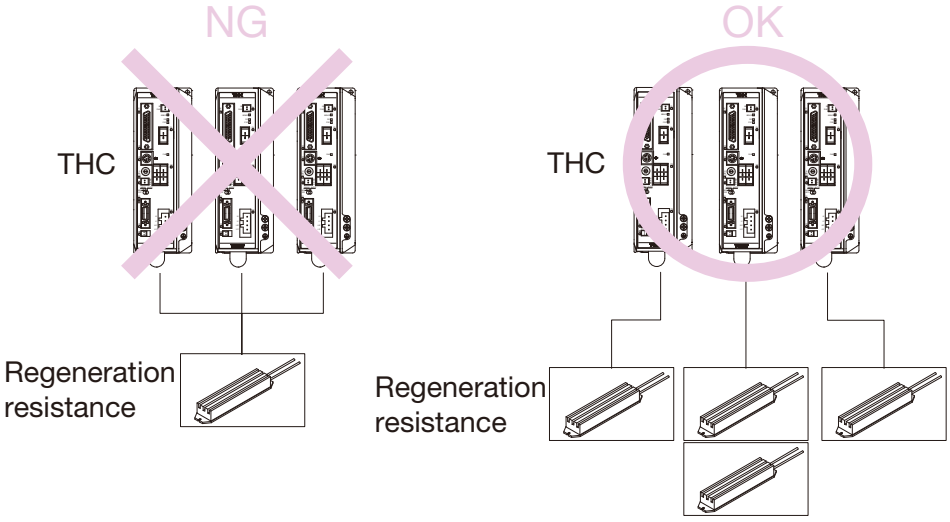

Network Unit / Branch Unit

TNU/TJU

Multiple-axis connection fieldbus compatible

Less Wiring Required

Connecting to a PLC through a fieldbus network requires less wiring than an I/O cable connection.
In addition, the network unit and each driver controller can be connected with a single dedicated cable.

CC-Link EtherCAT EtherNet/IP DeviceNet

Up to 16 Axes Can Be Connected

Up to 16 axes of mixed THK driver controllers (TSC, TLC, and THC) can be connected using one TNU and TJU (branch unit) in combination.

Direct Numerical Control Supported (Version 1.2 or later)

Position, speed, and acceleration commands can be made directly from the PLC. As well, information such as the current position can be monitored.

* TSC is supported with Version 1.22, TLC/THC with Version 1.07 or later.
* For TNU-EC support, contact THK.

System Configuration

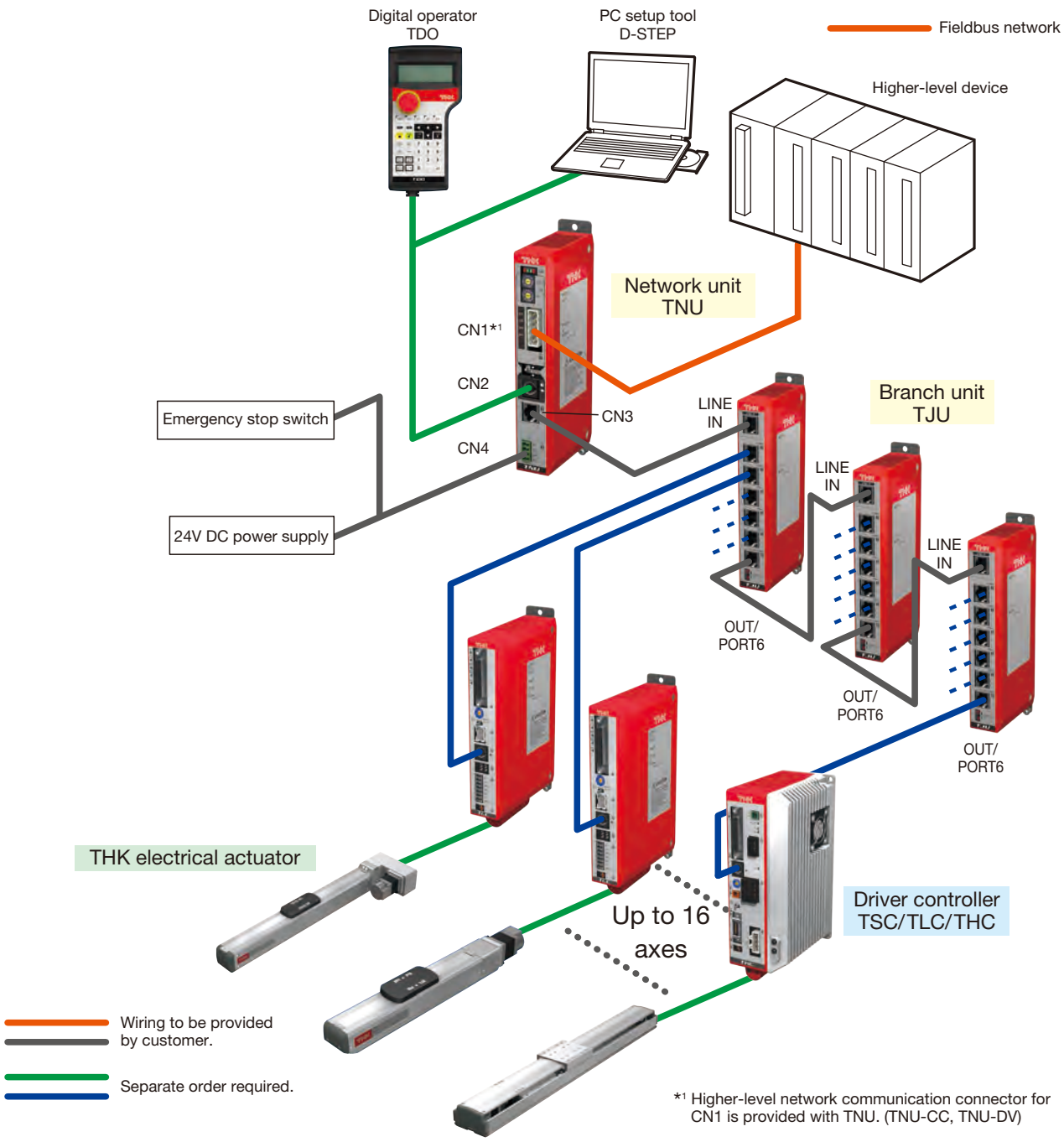

*1 Higher-level network communication connector for CN1 is provided with TNU. (TNU-CC, TNU-DV)

Model Configuration

● Network unit

Model		Network type
TNU	–	CC
(1)		(2)
TNU		CC:CC-Link DV:DeviceNet EC:EtherCAT EP:EtherNet/IP

● Branch unit

Model
TJU
(1)
TJU

● TACnet cable (between TJU and driver controller)

Model		Type		Cable length
CBL	–	NW	–	01
(1)		(2)		(3)
CBL		NW		01:1m 03:3m

Use an industrial Ethernet cable between TNU and TJU, and between TJUs.

Specifications

Model		TNU-CC		TNU-DV	TNU-EC	TNU-EP
Fieldbus	Communication standard	CC-Link Ver1.10	CC-Link Ver2.00	DeviceNet	EtherCAT	EtherNet/IP
	Communication speed	10Mbps/5Mbps/2.5Mbps/625kbps/156kbps		500kbps/250kbps/125kbps	100M	10M/100M
	Number of occupied stations	Remote device stations	Remote device stations	Number of occupied nodes: 1 Number of occupied channels*: input 128 CH output 128 CH	–	–
		4 stations	1 station, 2 stations, 3 stations, 4 stations			
Applicable controller		TSC/TLC/THC				
THK network	Transmission channel type	RS-485				
	Communication speed [bps]	38.4k/57.6k/115.2k				
	Communication method	Half duplex				
	Maximum trunk length [m]	20				
	Maximum number of connectable axes	16				
Input power supply		24V DC ±10%, up to 0.3A				
Operating/storage temperature		0 to 55°C (No freezing)/-20 to 85°C (No freezing)				
Ambient condition		Indoor (Free from direct sunlight, corrosive gas, flammable gas, oil mist)				
Protective function		Higher-level network communication error, communication error, system error				
Weight [g]		240(TJU:220)				

* The number of occupied channel numbers is fixed. If using master devices with 128 or fewer input occupied channels or 128 or fewer output occupied channels, contact THK.

Dimensions

● TNU

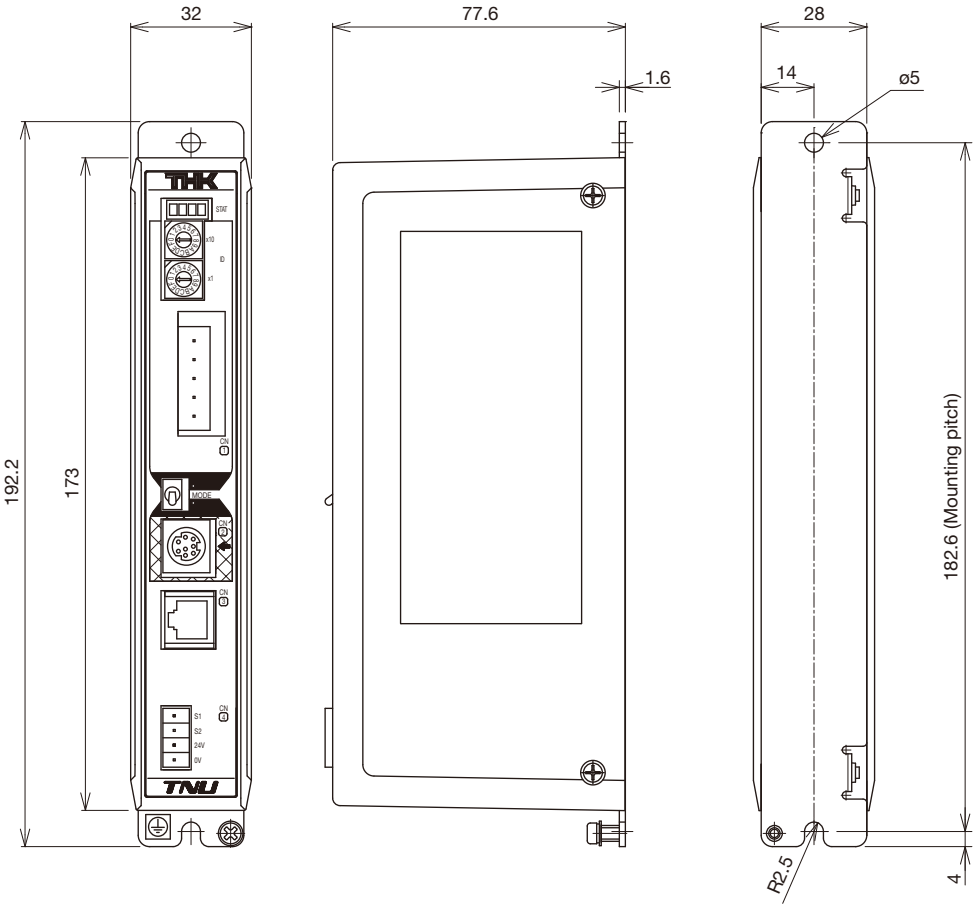

● TJU

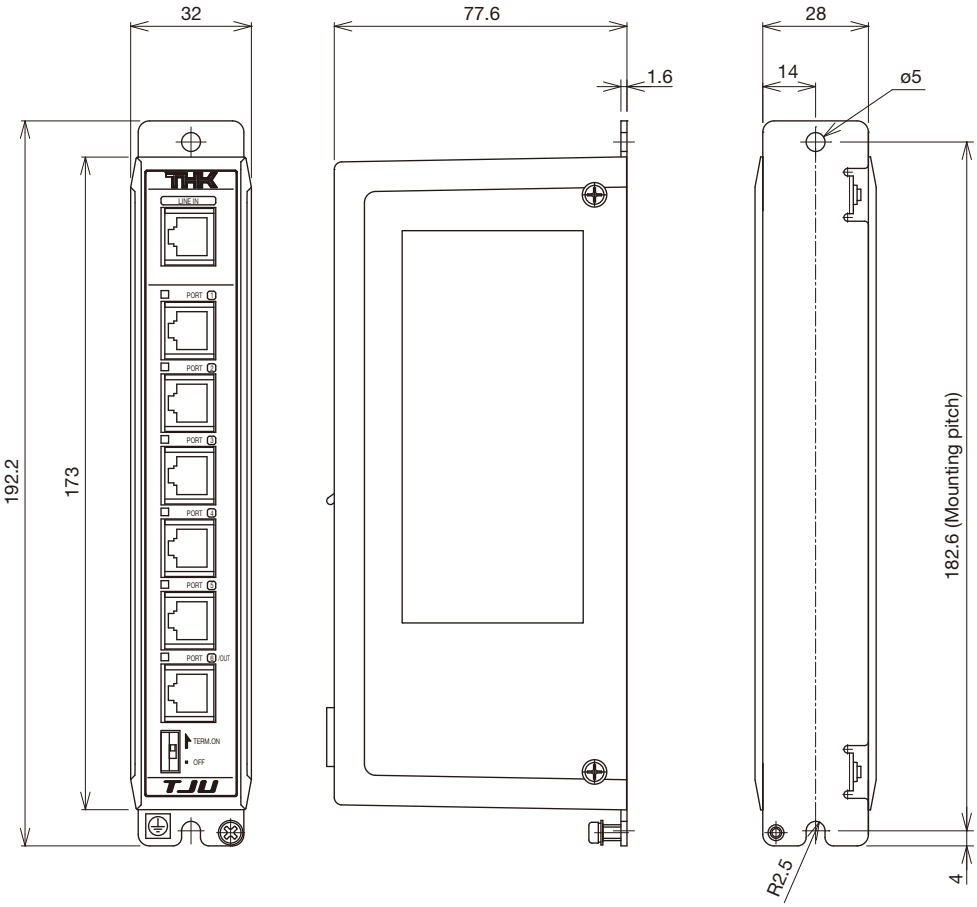

The external dimensions and mounting dimensions of TNU and TJU are the same.

Components

● TNU-CC
● TNU-EC

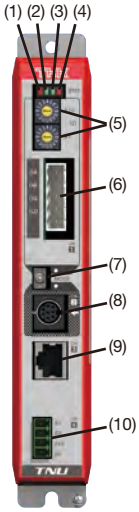

EtherCAT version

(1) Power-on display (red)
(2) Higher-level network communication status display (green)
(3) TACnet status display (green)
(4) Error display (red)
(5) Higher-level network ID setting switch
(6) Higher-level network communication connector "CN1"
(7) Higher-level device selection switch
(8) Communication connector "CN2"
(9) Communication connector "CN3"
(10) Power supply connector "CN4"

● TNU-DV

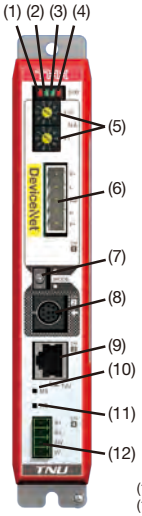

(1) Power-on display (red)
(2) Higher-level network communication status display (green)
(3) TACnet status display (green)
(4) Error display (red)
(5) Higher-level network ID setting switch
(6) Higher-level network communication connector "CN1"
(7) Higher-level device selection switch
(8) Communication connector "CN2"
(9) Communication connector "CN3"
(10) LED (MS)
(11) LED (NS)
(12) Power supply connector "CN4"

● TNU-EP

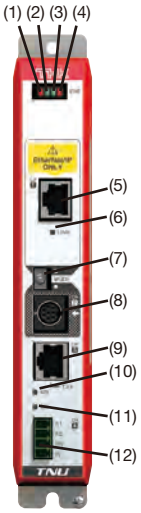

(1) Power-on display (red)
(2) Higher-level network communication status display (green)
(3) TACnet status display (green)
(4) Error display (red)
(5) Higher-level network communication connector "CN1"
(6) LED (LINK)
(7) Higher-level device selection switch
(8) Communication connector "CN2"
(9) Communication connector "CN3"
(10) LED (MS)
(11) LED (NS)
(12) Power supply connector "CN4"

● TJU

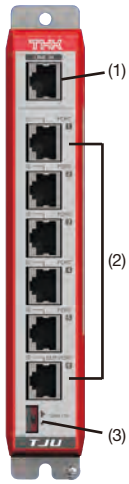

(1) Input port (higher-level connection)
(2) Output port (lower-level connection)
(3) Terminating resistance selection switch

External Device Connection (TNU)

● CC-Link

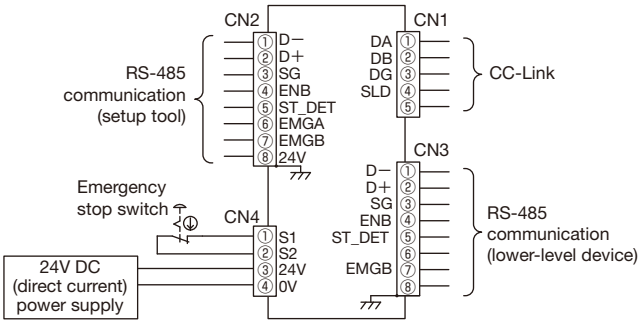

● EtherCAT

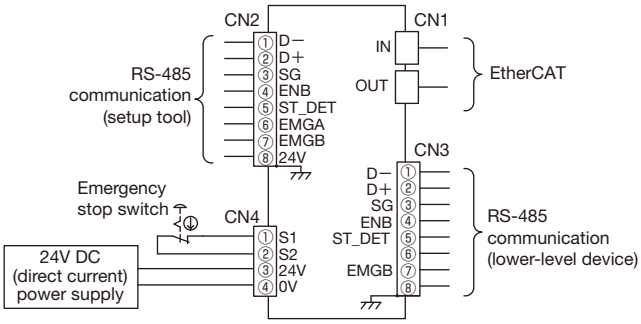

● EtherNet/IP

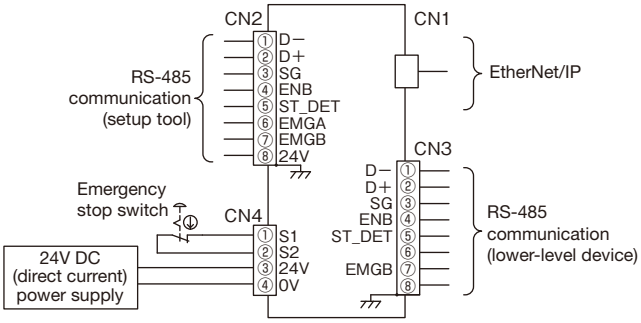

● DeviceNet

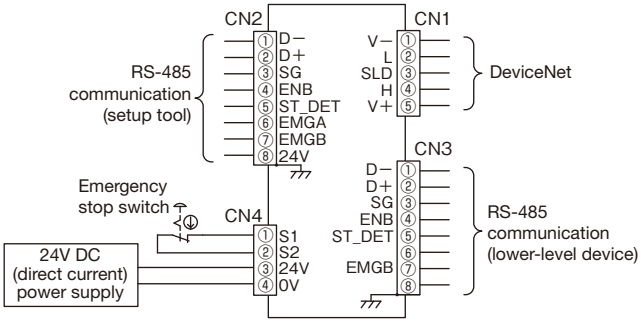

Note: The emergency stop terminals (CN4-S1 and S2) are not used for power shutdown of TNU, but used for an emergency stop of the lower-level device (THK driver controller).

TDO Digital operator (separate order required)

Features

Simple, quick operations and settings of TSC, TLC and THC are possible without using a PC.

Simple Operation

Key sheet with a straightforward design,
LC with backlight (20 digits × 4 lines).

Functions

- Checking and editing step data and parameters
- Operation of actuator
  (Return to home position, Jog operation, Inching operation, Program execution, Servo ON/OFF, Electromagnetic brake ON/OFF)
- Monitor (I/O, Current position, Position command, Current command, Version display)
- Alarm (History display, Clear history, Interrupt display on occurrence, Alarm reset)
- Settings (Backlight luminance, LCD contrast, Beep tone, Automatic turn off of backlight)
- Enable switch (3 positions) - Protection structure IP54 (excluding cable connectors) - Display language (Japanese/English)

External dimensions: 110mm (W) × 218.3mm (H) × 66.6mm (D) (excluding crests)
Main unit weight: 400g (excluding cables) Cable length: 5m
* TLC/THC is supported with Version 1.03 or later.
* TNU is supported with Version 1.10 or later.

Model Configuration

Model		Type
TDO	-	N
(1)		(2)
TDO		N: Category 2*1 compliant type

*1 ISO 13849-1

D-STEP PC setup tool

Three languages supported

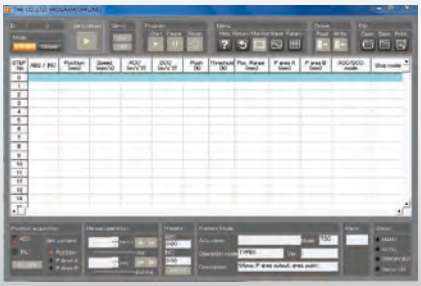
User-friendly interface

Features

Supports multifunctional TSC/TLC/THC with user-friendly interface.

Simple Operation

Operations and settings of TSC, TLC and THC are possible using a PC.
Equipped with functions useful for maintenance, such as backing up data or logging operating states.

Functions

- Checking, editing, backing up, or offline-editing of step data
- Checking, editing, backing up, or offline-editing of parameters
- Operations of actuator (Return to home position, Jog operation, Inching operation, Program execution, Servo ON/OFF)
- Monitor (I/O, Current position, Position command, Current command) - Logging (Speed and current waveform display)
- Alarm (History display, Clear history, Alarm reset) - Display language (Japanese/English/Simplified Chinese)

Supported OS: Windows XP/Windows Vista/Windows 7
D-STEP can be freely downloaded from the THK technical support website (https://tech.thk.com/).
* TLC/THC/TNU is supported with Version 1.10 or later.

Cable

I/O cable: CBL-CON-IO-** (optional)
** indicates cable length: 03 (3m), 05 (5m), or 10 (10m).

* Cables are shipped with the discrete wire side terminals unprocessed.
Cables are used for TSC/TLC/THC.

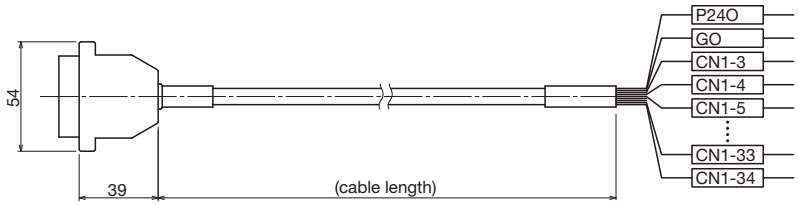

PC communications cable: CBL-COM-03 (optional)

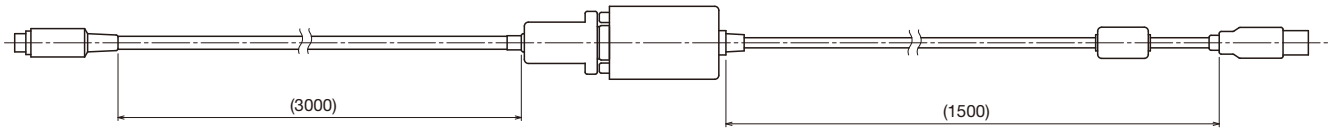

Precautions on Use

● Operation

- Do not unnecessarily disassemble the actuator or control devices. Doing so may allow foreign objects to enter or reduce functionality.
- Do not drop or knock the actuator or control devices. Doing so may cause injury or damage the unit. If the product is dropped or impacted, functionality may be reduced even if there is no surface damage.

● Environment

Wrong environment can cause failures of the actuator and control devices. The best place to use the product is as follows:

- Actuator: A place with an ambient temperature from 0 to 40°C and humidity of from 20% to 80% RH that will not expose the product to freezing or condensation.
- Controller: A place with an ambient temperature from 0 to 40°C and humidity of no more than 90% RH that will not expose the product to freezing or condensation.
- A place free from corrosive gas and flammable gas.
- A place free from electrically conductive powder (such as iron powder), dust, oil mist, moisture, salt, and organic solvent.
- A place free from direct sunlight and radiant heat.
- A place free from strong electric and magnetic fields
- A place where vibration or impact is not transmitted to the unit.
- A place that is easily accessible for service and cleaning purposes.

● Safety Precautions

- When the actuator is in motion or about to be in motion, do not touch any moving parts. Do not go near the actuator when it is in motion.
- Before performing installation, adjustment, checking, or services regarding the actuator and the connected peripherals, ensure that all power is disconnected. In addition, take countermeasures to prevent anyone other than the operator from turning on the power.
- If two or more people are involved in the operation, confirm the procedures such as sequences, signs, and abnormalities in advance, and appoint another person for monitoring the operation.
- Before operation, please read thoroughly and obey "Manipulating industrial robots
- Safety" (JIS B8433) and "Ordinance on Industrial Safety and Health" (Ministry of Health, Labor and Welfare).
- Operation of the actuator over the torque limit value leads to damage of parts or injury. Please keep the torque limit settings of parameters within THK specifications.
- For folding type of PCT and PC, this product does not include a safety device to protect users when the timing belt is broken. The customer must provide a safety device.
- Although a stopper is installed inside the product, it is intended to limit the stroke and therefore may be damaged in case of a hard collision.
- PC is designed to accommodate load in the pressing direction. Applying a load in the tensile direction may shorten product life.
- With PCT, only an axial load is permissible.
- Please contact THK if a rotational torque or moment load is applied to the PC rod.
- The total weight of PC exceeds 20kg. When moving the product, use hanger bolts to raise and move the product.Do not use a hanger belt alone to raise the product.When moving the product vertically, such as for installation, use two bolts at the motor side and the rod side.When moving it horizontally, use two or four bolts at the motor side and the rod side.Some models may tilt when raised, due to unbalanced center of gravity.

- Storage

  When storing the actuator, enclose it in a package designated by THK and store it in a horizontal position away from abnormally high or low temperatures and high humidity.
  - When storing the control devices, avoid abnormally high or low temperatures and high humidity.

- Lubrication

  In order to effectively use the actuator, lubrication is required. Insufficient lubrication may increase abrasion on moving parts and shorten service life.
  - Do not use a mix of lubricants with different physical properties.
  - Please contact THK if using special lubricants.
  - The greasing interval may vary depending on the usage conditions, so THK recommends determining a greasing interval during the initial inspection.

THK ELECTRIC ACTUATORS Press Series PCT/PC

- LM Guide is registered trademarks of THK CO., LTD.
- The actual products may differ from the pictures and photographs in this catalog.
- Outward appearances and specifications are subject to change without notification for the purpose of improvement.
- Although great care has been taken in the production of this catalog, THK will not take any responsibility for damage resulting from typographical errors or omissions.
- In exporting our products and technology, or selling them for the purpose of export, THK has a basic policy of observing laws relating to foreign exchange, trade and other laws. For export of THK products as single items, please contact THK in advance.

THK CO., LTD.

Head Office 3-11-6 Nishigotanda, Shinagawa-ku, Tokyo 141-8503 JAPAN
International Sales Department Phone:+81-3-5434-0351 Fax:+81-3-5434-0353
Global site : http://www.thk.com/

NORTH AMERICA
THK America,Inc.
●HEADQUARTERS
Phone:+1-847-310-1111 Fax:+1-847-310-1271
●CHICAGO OFFICE
Phone:+1-847-310-1111 Fax:+1-847-310-1182
●NORTH EAST OFFICE
Phone:+1-631-244-1565 Fax:+1-631-244-1565
●ATLANTA OFFICE
Phone:+1-770-840-7990 Fax:+1-770-840-7897
●LOS ANGELES OFFICE
Phone:+1-949-955-3145 Fax:+1-949-955-3149
●SAN FRANCISCO OFFICE
Phone:+1-925-455-8948 Fax:+1-925-455-8965
●DETROIT OFFICE
Phone:+1-248-858-9330 Fax:+1-248-858-9455
●TORONTO OFFICE
Phone:+1-905-820-7800 Fax:+1-905-820-7811

SOUTH AMERICA
THK BRAZIL INDUSTRIA E COMERCIO LTDA.
Phone:+55-11-3767-0100 Fax:+55-11-3767-0101

EUROPE
THK GmbH
●EUROPEAN HEADQUARTERS
Phone:+49-2102-7425-555 Fax:+49-2102-7425-556
●DÜSSELDORF OFFICE
Phone:+49-2102-7425-0 Fax:+49-2102-7425-299
●STUTTGART OFFICE
Phone:+49-7141-4988-500 Fax:+49-7141-4988-888
●U.K. OFFICE
Phone:+44-1384-47-1550 Fax:+44-1384-47-1551
●ITALY OFFICE
Phone:+39-02-9901-1801 Fax:+39-02-9901-1881
●SWEDEN OFFICE
Phone:+46-8-445-7630 Fax:+46-8-445-7639
●AUSTRIA OFFICE
Phone:+43-7229-51400 Fax:+43-7229-51400-79
●SPAIN OFFICE
Phone:+34-93-652-5740 Fax:+34-93-652-5746
●TURKEY OFFICE
Phone:+90-216-362-4050 Fax:+90-216-569-7150
●PRAGUE OFFICE
Phone:+420-2-41025-100 Fax:+420-2-41025-199
●MOSCOW OFFICE
Phone:+7-495-649-80-47 Fax:+7-495-649-80-44
THK Europe B.V.
●EINDHOVEN OFFICE
Phone:+31-040-290-9500 Fax:+31-040-290-9599
THK France S.A.S.
●PARIS OFFICE
Phone:+33-1-7425-3800 Fax:+33-1-7425-3799

CHINA
THK (CHINA) CO.,LTD.
●HEADQUARTERS
Phone:+86-411-8733-7111 Fax:+86-411-8733-7000
●SHANGHAI OFFICE
Phone:+86-21-6219-3000 Fax:+86-21-6219-9890
●BEIJING OFFICE
Phone:+86-10-8441-7277 Fax:+86-10-6590-3557
●CHENGDU OFFICE
Phone:+86-28-8526-8025 Fax:+86-28-8525-6357
●GUANGZHOU OFFICE
Phone:+86-20-8523-8418 Fax:+86-20-3801-0456
●SHENZHEN OFFICE
Phone:+86-755-2642-9587 Fax:+86-755-2642-9604
●XIAN OFFICE
Phone:+86-29-8834-1712 Fax:+86-29-8834-1710
THK (SHANGHAI) CO.,LTD.
Phone:+86-21-6275-5280 Fax:+86-21-6219-9890

TAIWAN
THK TAIWAN CO.,LTD.
●TAIPEI HEAD OFFICE
Phone:+886-2-2888-3818 Fax:+886-2-2888-3819
●TAICHUNG OFFICE
Phone:+886-4-2359-1505 Fax:+886-4-2359-1506
●TAINAN OFFICE
Phone:+886-6-289-7668 Fax:+886-6-289-7669

KOREA
SEOUL REPRESENTATIVE OFFICE
Phone:+82-2-3468-4351 Fax:+82-2-3468-4353

SINGAPORE
THK LM System Pte. Ltd.
Phone:+65-6884-5500 Fax:+65-6884-5550

THAILAND
THK RHYTHM(THAILAND) CO., LTD. LM System Division
●Bangkok Branch
Phone:+66-2751-3001 Fax:+66-2751-3003

INDIA
THK India Pvt. Ltd.
●HEADQUARTERS & Bangalore Branch
Phone:+91-80-2340-9934 Fax:+91-80-2340-9937
●Pune Branch
Phone:+91-20-4120-8742
●Chennai Branch
Phone:+91-44-4042-3132
●Ahmedabad Branch
Phone:+91-79-6134-4925
●Delhi Branch
Phone:+91-12-4676-8695

 201708000 E27 Printed in Japan